IAL–D–6805
38849

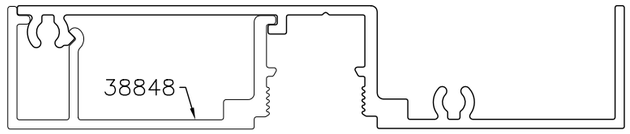

SCALE 1:1

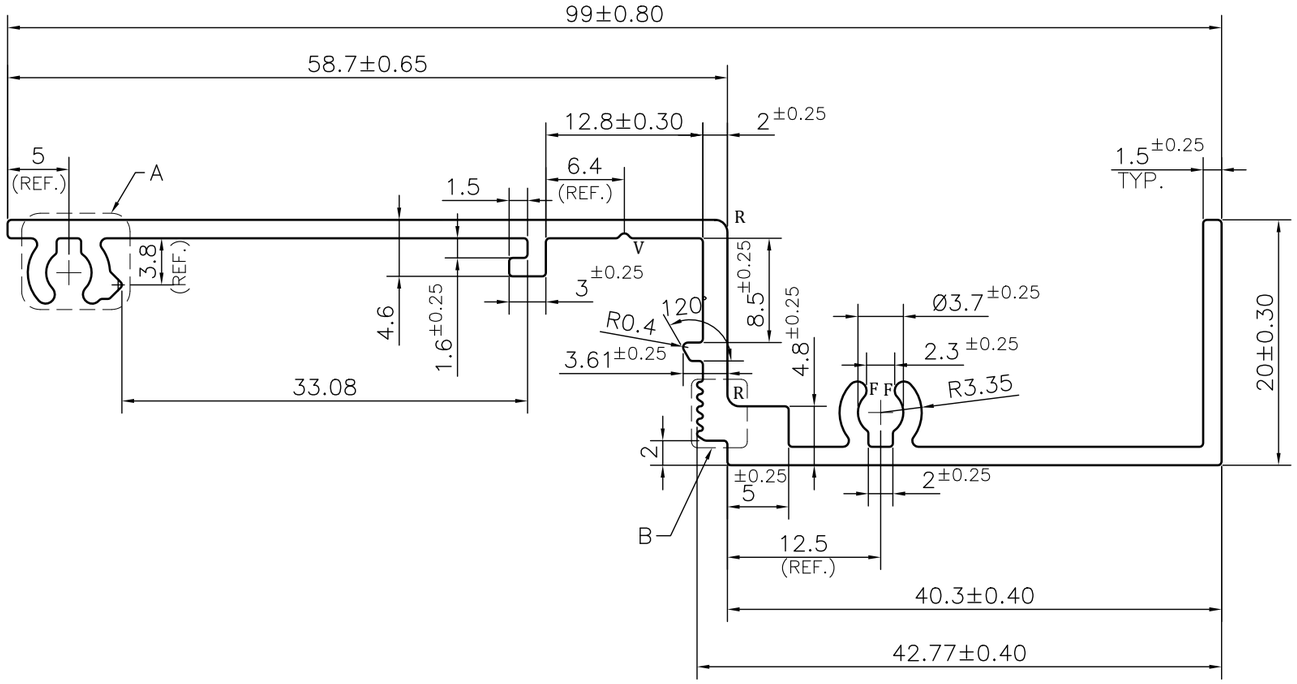

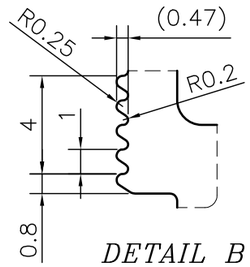

DETAIL B
SCALE 4:1

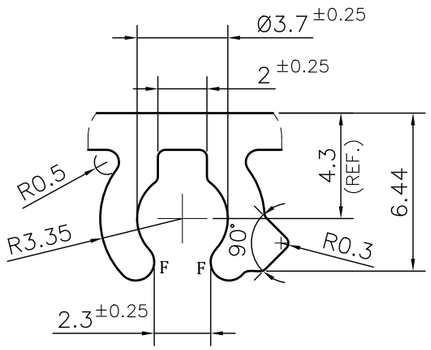

DETAIL A
SCALE 4:1

NOTE:-
R= 1.0 RADIUS (2 PLACES)
F= FULL RADIUS (4 PLACES)
V= 0.4x90° V-GROOVE (1 PLACE)

1. STRAIGHTNESS= 1.7mm/M
2. TWIST= 1.7mm/M
3. ANGULARITY= ±2°
4. FLATNESS= 0.007xWIDTH

			NAME	DATE
SYMBOL OF QUALITY AN ISO 9001 COMPANY	JINDAL ALUMINIUM LTD. BHIWADI–301019 (INDIA)	DRAWN	ASHUTOSH	27–01–2024
		CHECKED		
		APPROVED		
1. ALL DIMENSIONS ARE IN mm. 2. ROUND OFF ALL SHARP CORNERS WITH 0.40 mm. 3. TOLERANCES WILL BE AS PER BS:EN–755–9 , UNLESS OTHERWISE SPECIFIED		SCALE		2:1
		AREA mm^2		271.388
		PERIMETER mm.		328.91
		WEIGHT kg/m		0.733
PARTY'S NAME	PERFECT SOLUTION	DRAWING No.		SECTION No.
PARTY'S DRAWING No.	AS PER DRAWING	IAL–D–6805		–
ALLOY & TEMPER	6063 T6 — PRODUCT CODE:–056 / HSN CODE:– 76042990	38849		38849
DESCRIPTION	ARCHITECTURAL MISC. SECTION			