P−17599
S5564
40535

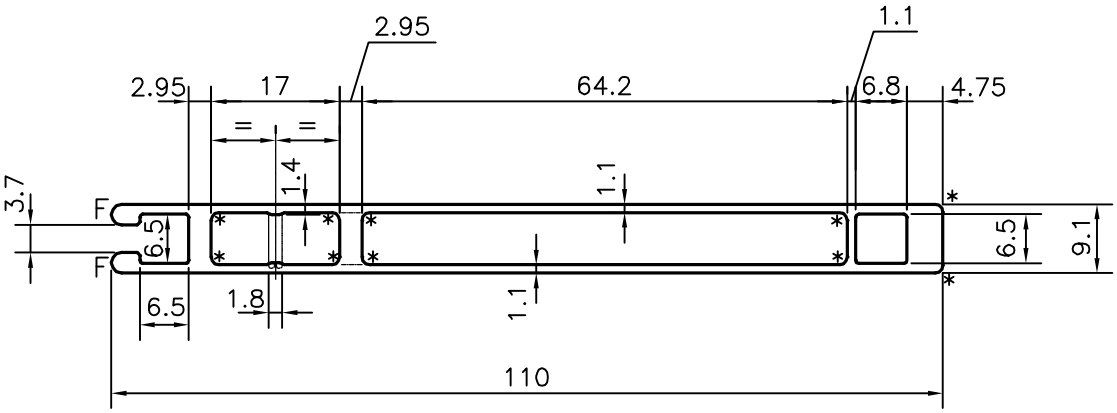

F = FULL RADIUS (2 PLACES)
* = 1.0 RADIUS (10 PLACES)

TOLERANCES ON OVERALL WIDTHS & WIDTHS ACROSS FLATS OF BARS, & REGULAR SECTIONS

UPTO 6.40mm − ±0.20	UPTO 32.0mm − ±0.38	UPTO 120.0mm − ±0.85	UPTO 320.00mm − ±1.70
UPTO 10.0mm − ±0.23	UPTO 50.0mm − ±0.46	UPTO 160.0mm − ±1.02	
UPTO 12.0mm − ±0.25	UPTO 60.0mm − ±0.53	UPTO 200.0mm − ±1.14	
UPTO 16.0mm − ±0.28	UPTO 80.0mm − ±0.69	UPTO 250.0mm − ±1.40	
UPTO 25.0mm − ±0.30	UPTO 100.0mm − ±0.75	UPTO 300.0mm − ±1.65	

JINDAL
SYMBOL OF QUALITY
AN ISO 9001 COMPANY

JINDAL ALUMINIUM LTD.
BANGALORE−560073 (INDIA)

	NAME	DATE
DRAWN	J.P.KAUSHIK	30−10−2017
CHECKED		
APPROVED	B.NATARAJA	04−11−2017

1. ALL DIMENSIONS ARE IN mm.
2. ROUND OFF ALL SHARP CORNERS WITH 0.40 mm.
3. TOLERANCES WILL BE AS PER,IS:6477−1983 UNLESS OTHERWISE SPECIFIED

SCALE	1:1
AREA mm^2	341.299
PERIMETER mm.	260.094
WEIGHT kg/m	0.922

PARTY'S NAME	MEHUL IRON & STEEL WORKS, MUMBAI
PARTY'S DRAWING No.	AS PER SAMPLE
ALLOY & TEMPER	HE9 WP
DESCRIPTION	TEXTILE SECTION

DRAWING No.	SECTION No.
P−17599	−
S5564	S5564
40535	40535