IAL-D-3724
41569

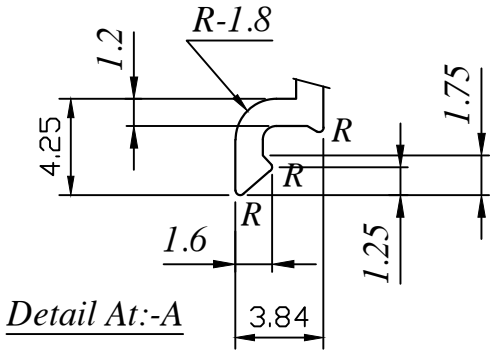

Detail At:-A

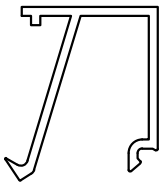

Actual Size

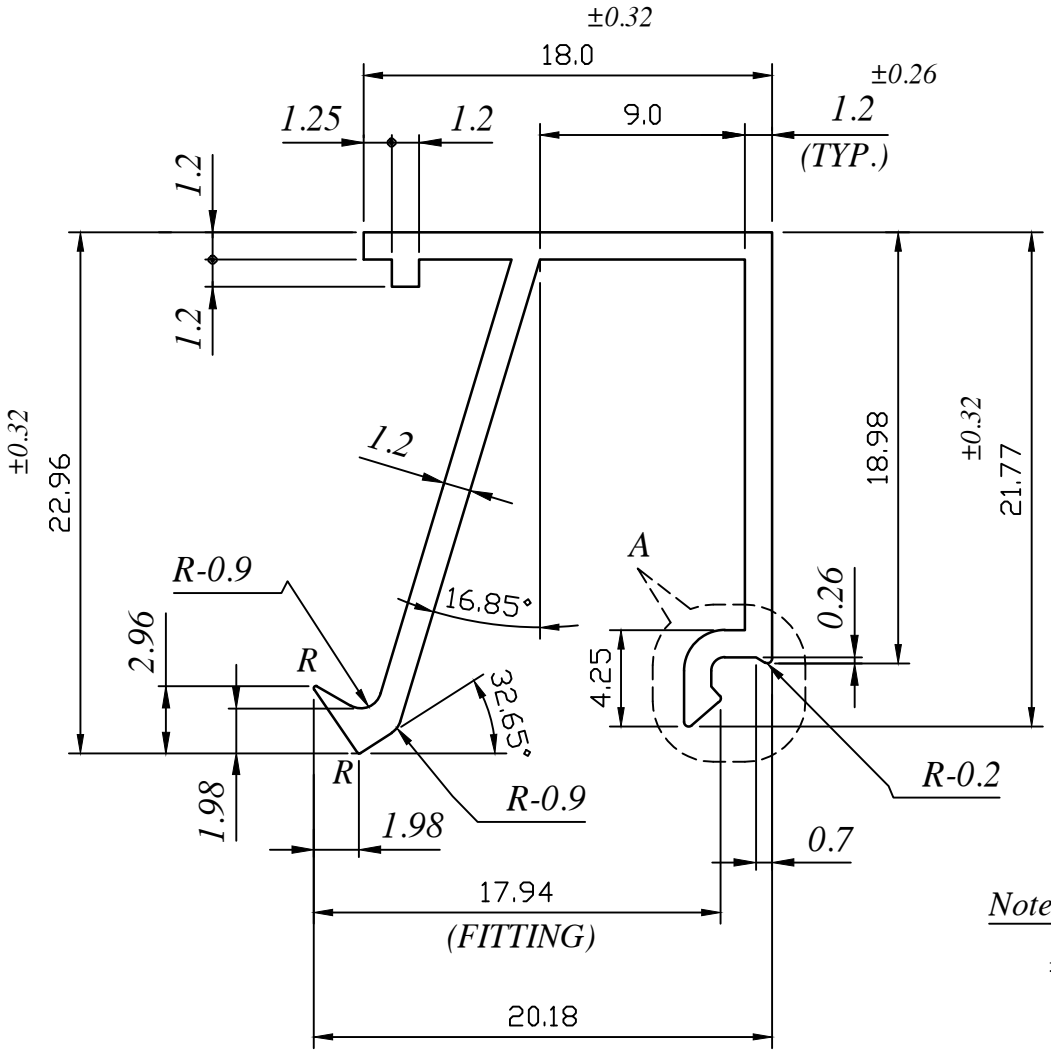

Note:-

R =0.2R

GLAZING BEAD

			NAME	DATE
JINDAL SYMBOL OF QUALITY AN ISO 9001 COMPANY	JINDAL ALUMINIUM LTD. BANGALORE-560073 (INDIA)	DRAWN	S.K.SHARMA	18-02-2022
		CHECKED		
		APPROVED		

1. ALL DIMENSIONS ARE IN mm.
2. ROUND OFF ALL SHARP CORNERS WITH 0.40 mm.
3. TOLERANCES WILL BE AS PER BS:EN-755-9 , UNLESS OTHERWISE SPECIFIED

SCALE	1:1&3:1
AREA mm^2	80.0
PERIMETER mm.	135.8
WEIGHT kg/m	0.216

DRAWING No.	SECTION No.
IAL-D-3724	–
41569	41569

PARTY'S NAME	M/S. AAP DIVISION
PARTY'S DRAWING No.	AS PER DRAWING
ALLOY & TEMPER	6063-T6
DESCRIPTION	GLAZING CLIP