P–22485
43514

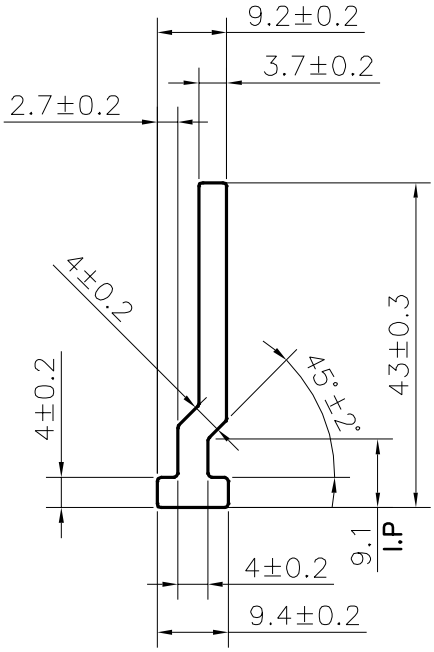

SCALE:- 1:1

*APPROXIMATE WEIGHT RANGE – **0.458 – 0.560 kg/m***

TOLERANCES ON OVERALL WIDTHS & WIDTHS ACROSS FLATS OF BARS, & REGULAR SECTIONS

UPTO 6.40mm – ±0.20	UPTO 32.0mm – ±0.38	UPTO 120.0mm – ±0.85	1. STRAIGHTNESS=1.7mm/M
UPTO 10.0mm – ±0.23	UPTO 50.0mm – ±0.46	UPTO 160.0mm – ±1.02	2. TWIST=1.7mm/M
UPTO 12.0mm – ±0.25	UPTO 60.0mm – ±0.53	UPTO 200.0mm – ±1.14	3. ANGULARITY= ±2°
UPTO 16.0mm – ±0.28	UPTO 80.0mm – ±0.69	UPTO 250.0mm – ±1.40	4. FLATNESS =0.007xWIDTH
UPTO 25.0mm – ±0.30	UPTO 100.0mm – ±0.75	UPTO 300.0mm – ±1.65	

JINDAL

SYMBOL OF QUALITY
AN ISO 9001 COMPANY

JINDAL ALUMINIUM LTD.

BANGALORE–560073 (INDIA)

	NAME	DATE
DRAWN	DARPAN	17–04–2021
CHECKED		
APPROVED	B.NATARAJA	20–04–2021

1. ALL DIMENSIONS ARE IN mm.
2. ROUND OFF ALL SHARP CORNERS WITH 0.50 mm.
3. TOLERANCES WILL BE AS PER **IS:3965–1981** , UNLESS OTHERWISE SPECIFIED

SCALE	1:1
AREA mm^2	188.650
PERIMETER mm.	104.900
WEIGHT kg/m	0.509

PARTY'S NAME	MACRO AUTOTECH, FARIDABAD
PARTY'S DRAWING No.	AS PER DRAWING
ALLOY & TEMPER	6005 T5
DESCRIPTION	AUTOMOBILE SECTION

DRAWING No.	SECTION No.
P–22485	–
43514	43514