P−23191−1
43611

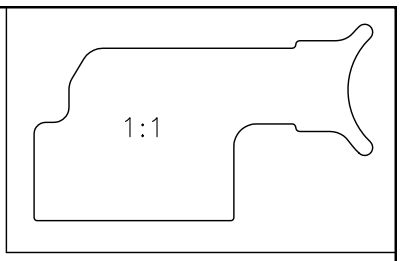

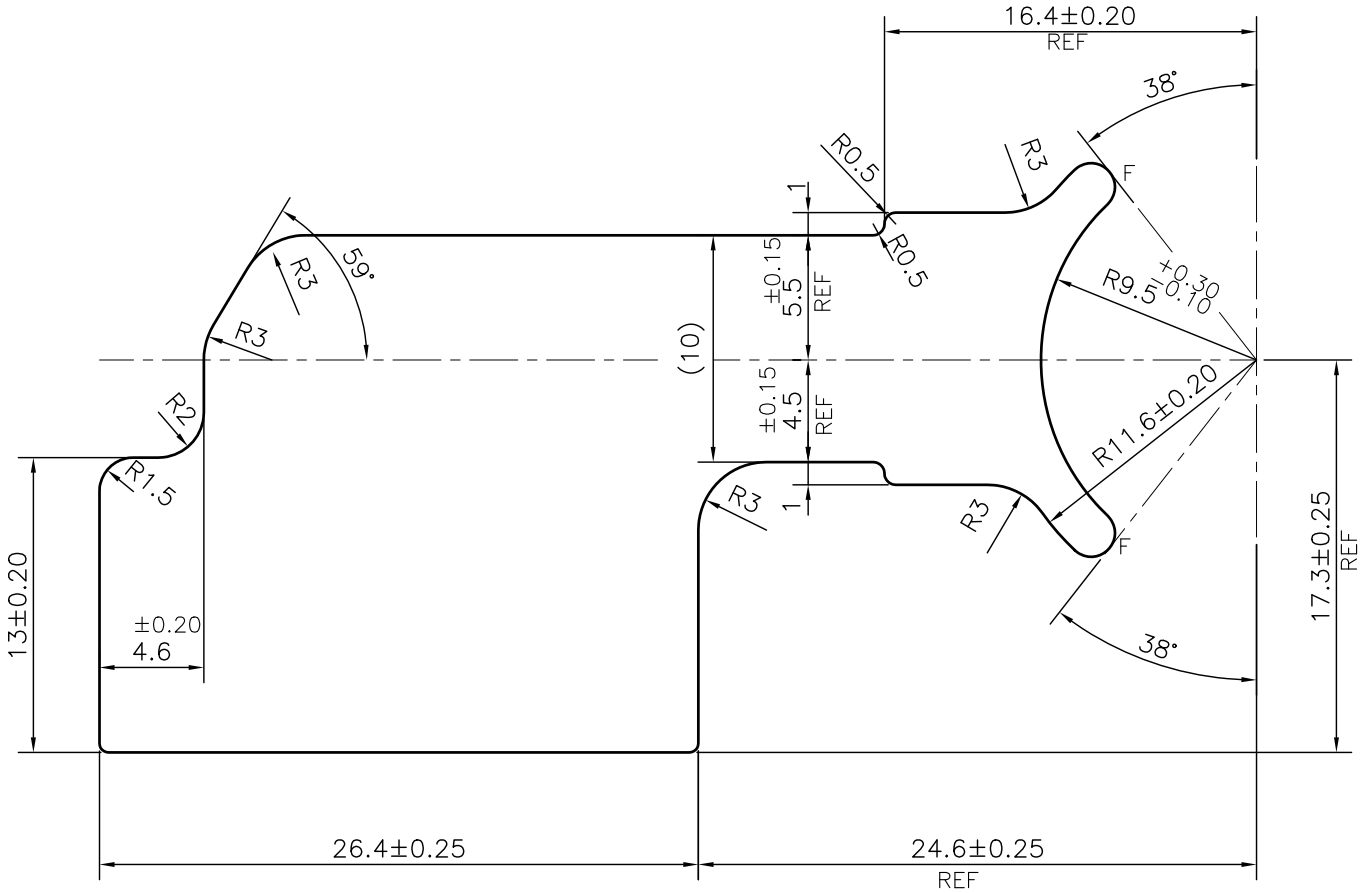

F= FULL RADIUS (2 PLACES)

1. STRAIGHTNESS=1.7mm/M
2. TWIST=1.7mm/M
3. ANGULARITY= ±2°
4. FLATNESS =0.007xWIDTH

APPROXIMATE WEIGHT RANGE −1.794 − 2.192 kg/m

			NAME	DATE
JINDAL SYMBOL OF QUALITY AN ISO 9001 COMPANY	*JINDAL ALUMINIUM LTD.* *BANGALORE−560073 (INDIA)*	DRAWN	J.P.KAUSHIK	18−11−2021
		CHECKED		
		APPROVED	B.NATARAJA	23−11−2021

1. ALL DIMENSIONS ARE IN mm.
2. ROUND OFF ALL SHARP CORNERS WITH 0.40 mm.
3. TOLERANCES WILL BE AS PER IS:3965−1981 , UNLESS OTHERWISE SPECIFIED

SCALE	3:1
AREA mm^2	738.205
PERIMETER mm.	140.976
WEIGHT kg/m	1.993

PARTY'S NAME	PYN PRECISION COMPONENTS, FARIDABAD
PARTY'S DRAWING No.	AS PER DRAWING
ALLOY & TEMPER	6005 T5
DESCRIPTION	INLET FLANGE SECTION

DRAWING No.	SECTION No.
P−23191−1	−
43611	43611