P−23192−1
43612

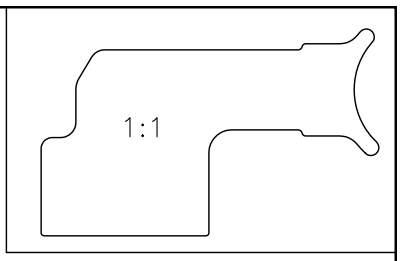

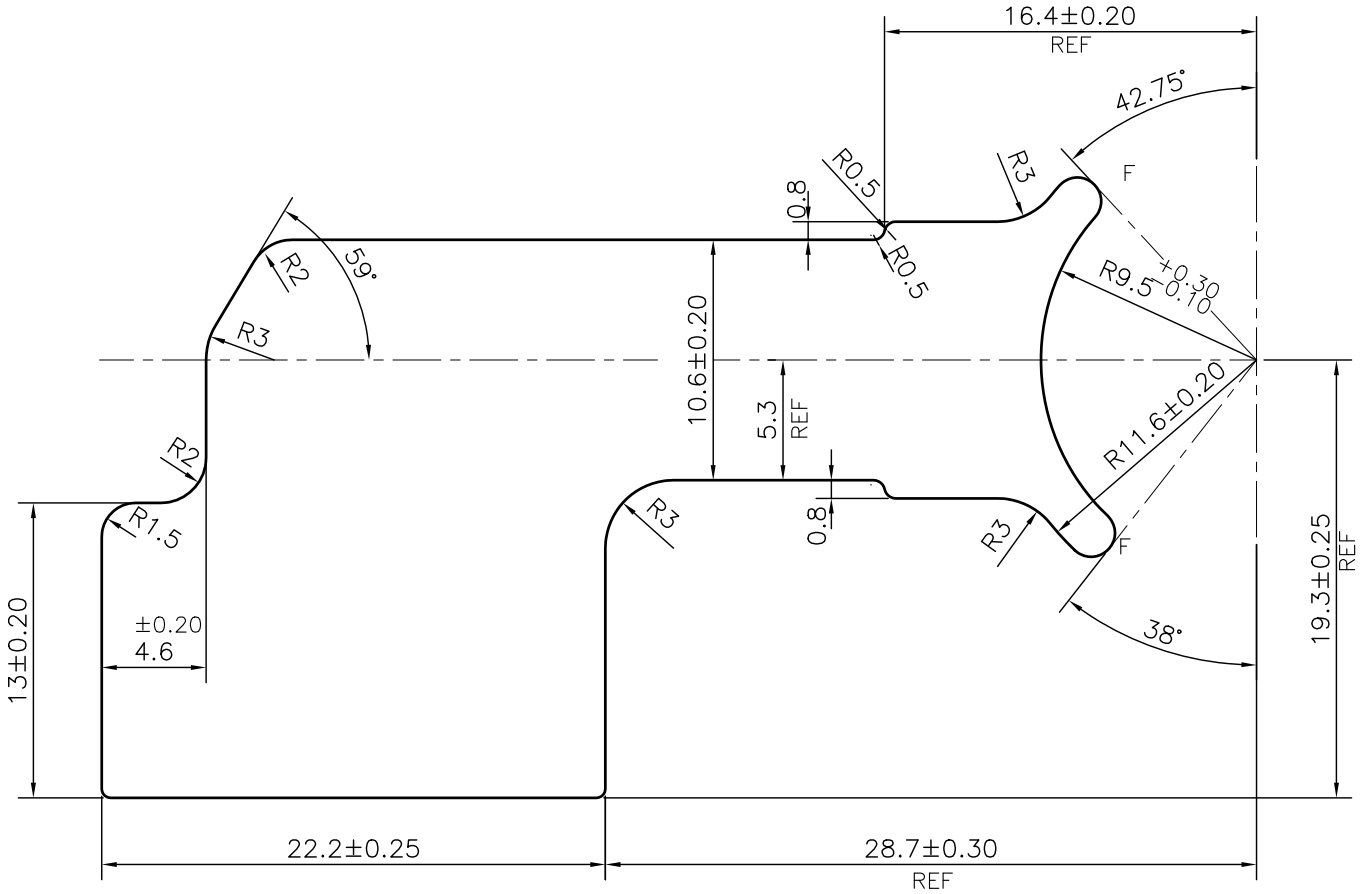

F= FULL RADIUS (2 PLACES)

1. STRAIGHTNESS=1.7mm/M
2. TWIST=1.7mm/M
3. ANGULARITY= ±2°
4. FLATNESS =0.007xWIDTH

APPROXIMATE WEIGHT RANGE −1.756 − 2.146 kg/m

JINDAL

SYMBOL OF QUALITY
AN ISO 9001 COMPANY

JINDAL ALUMINIUM LTD.

BANGALORE−560073 (INDIA)

	NAME	DATE
DRAWN	J.P.KAUSHIK	18−11−2021
CHECKED		
APPROVED	B.NATARAJA	23−11−2021

1. ALL DIMENSIONS ARE IN mm.
2. ROUND OFF ALL SHARP CORNERS WITH 0.40 mm.
3. TOLERANCES WILL BE AS PER IS:3965−1981 , UNLESS OTHERWISE SPECIFIED

SCALE	3:1
AREA mm^2	722.579
PERIMETER mm.	141.743
WEIGHT kg/m	1.951

PARTY'S NAME	PYN PRECISION COMPONENTS, FARIDABAD
PARTY'S DRAWING No.	AS PER DRAWING
ALLOY & TEMPER	6005 T5
DESCRIPTION	OUTLET FLANGE SECTION

DRAWING No.	SECTION No.
P−23192−1	−
43612	43612