IAL–D–7348
43630

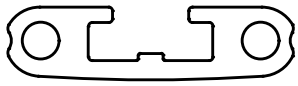

ACTUAL SIZE

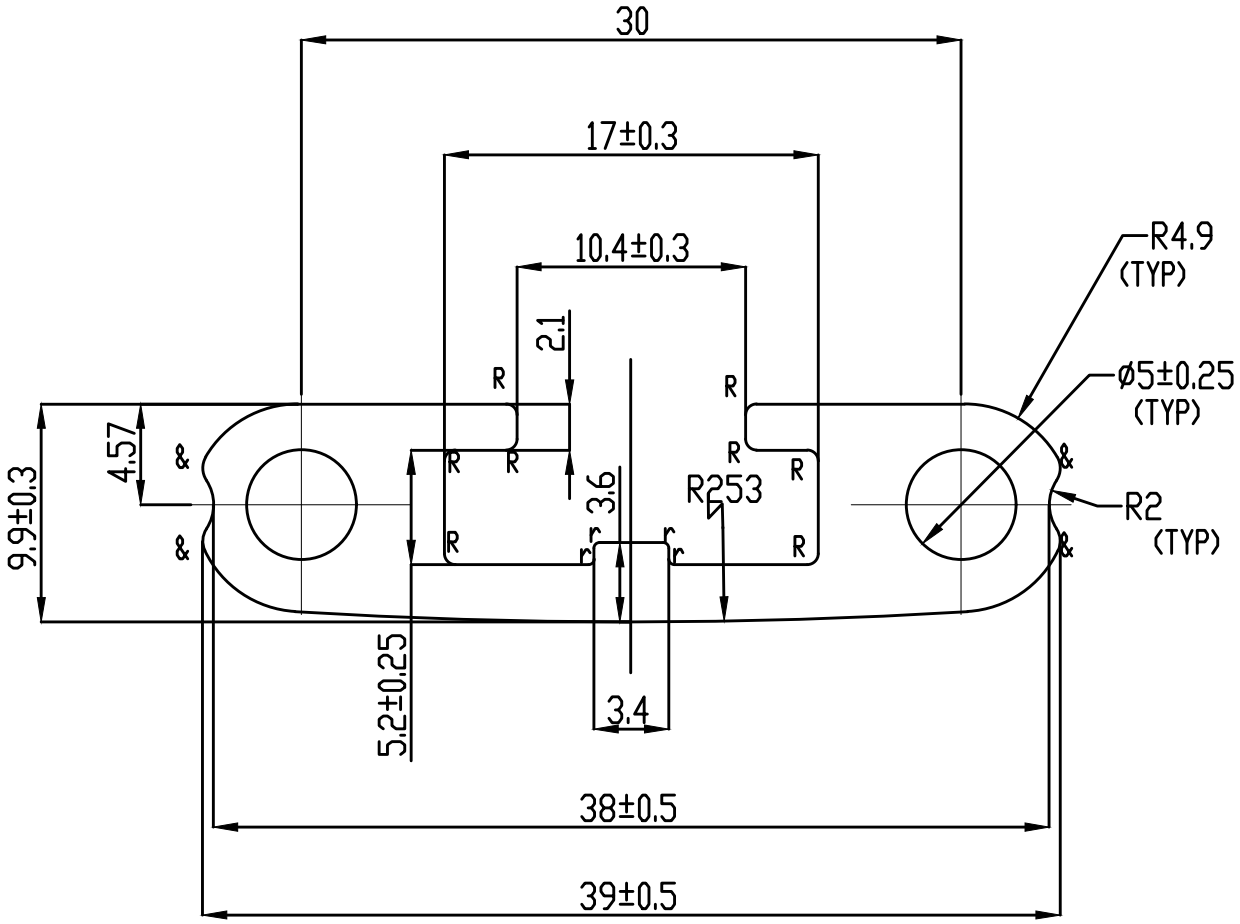

NOTE:-

R = 0.5R
r = 0.25R
& = 1.0R

TWIST=2.10 MTR.
FLATNESS = WIDTH X 0.008 MM.
STRAIGHTNESS= 1.70 M.M./MTR
ANGULARITY= ±2°

			NAME	DATE
JINDAL SYMBOL OF QUALITY AN ISO 9001 COMPANY	JINDAL ALUMINIUM LTD. BANGALORE–560073 (INDIA)	DRAWN	PARVESH	22–12–2021
		CHECKED		
		APPROVED		

1. ALL DIMENSIONS ARE IN mm.
2. ROUND OFF ALL SHARP CORNERS WITH 0.40 mm.
3. TOLERANCES WILL BE AS PER IS:6477–1983 , UNLESS OTHERWISE SPECIFIED

SCALE	3:1
AREA mm^2	215.49
PERIMETER mm.	118.12
WEIGHT kg/m	0.581

PARTY'S NAME	–
PARTY'S DRAWING No.	AS PER DRAWING
ALLOY & TEMPER	6063 T6
DESCRIPTION	INDUSTRIAL SECTION

DRAWING No.	SECTION No.
IAL–D–7348	–
43630	43630