P−22204−1
46012

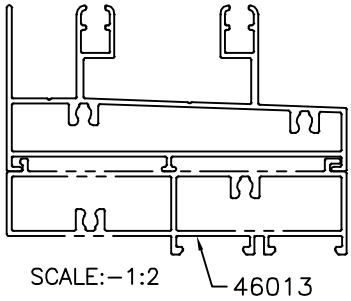

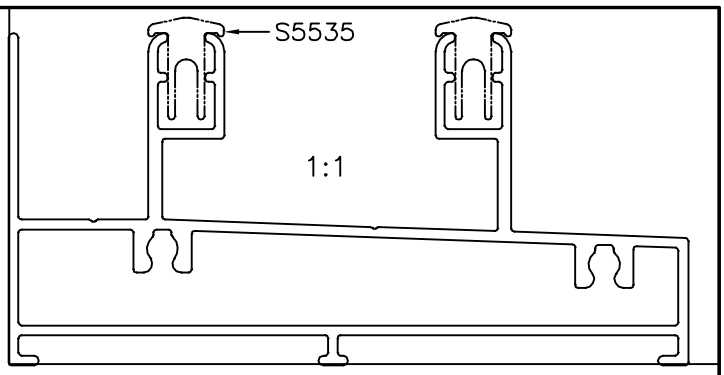

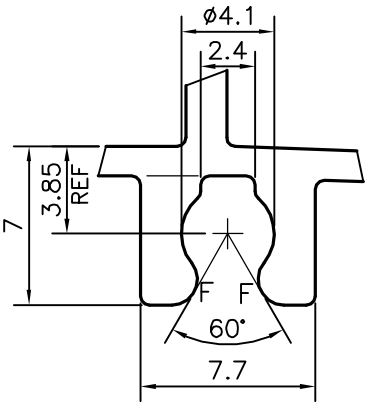

DETAIL OF "A"
SCALE 3:1

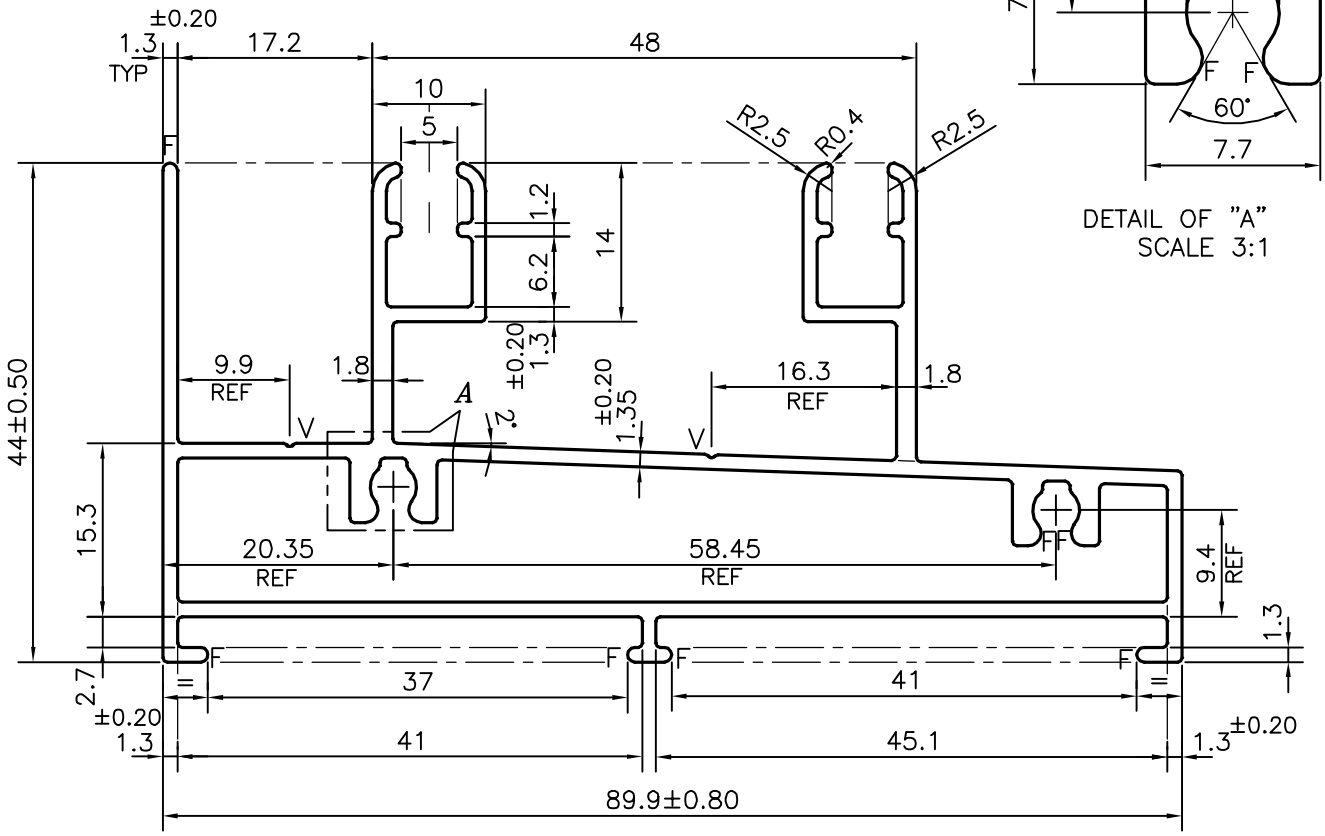

V = V GROOVE 0.3x90° (2 PLACES)

F = FULL RADIUS (9 PLACES)

APPROXIMATE WEIGHT RANGE −1.244 − 1.520 kg/m

			NAME	DATE
JINDAL SYMBOL OF QUALITY AN ISO 9001 COMPANY	*JINDAL ALUMINIUM LTD.* *BANGALORE−560073 (INDIA)*	DRAWN	J.P.KAUSHIK	22−02−2021
		CHECKED		
		APPROVED	B.NATARAJA	06−07−2021

1. ALL DIMENSIONS ARE IN mm.
2. ROUND OFF ALL SHARP CORNERS WITH 0.40 mm.
3. TOLERANCES WILL BE AS PER IS:6477−1983 , UNLESS OTHERWISE SPECIFIED

SCALE	1.5:1
AREA mm^2	510.893
PERIMETER mm.	487.142
WEIGHT kg/m	1.379

PARTY'S NAME	ALFA FACADE SYSTEMS PVT. LTD., PUNE
PARTY'S DRAWING No.	AS PER DRAWING
ALLOY & TEMPER	6063 T6
DESCRIPTION	WINDOW SECTION−2 TRACK

DRAWING No.	SECTION No.
P−22204−1	−
46012	46012