PRODUCED BY AN AUTODESK EDUCATIONAL PRODUCT

IAL–D–5880
46046

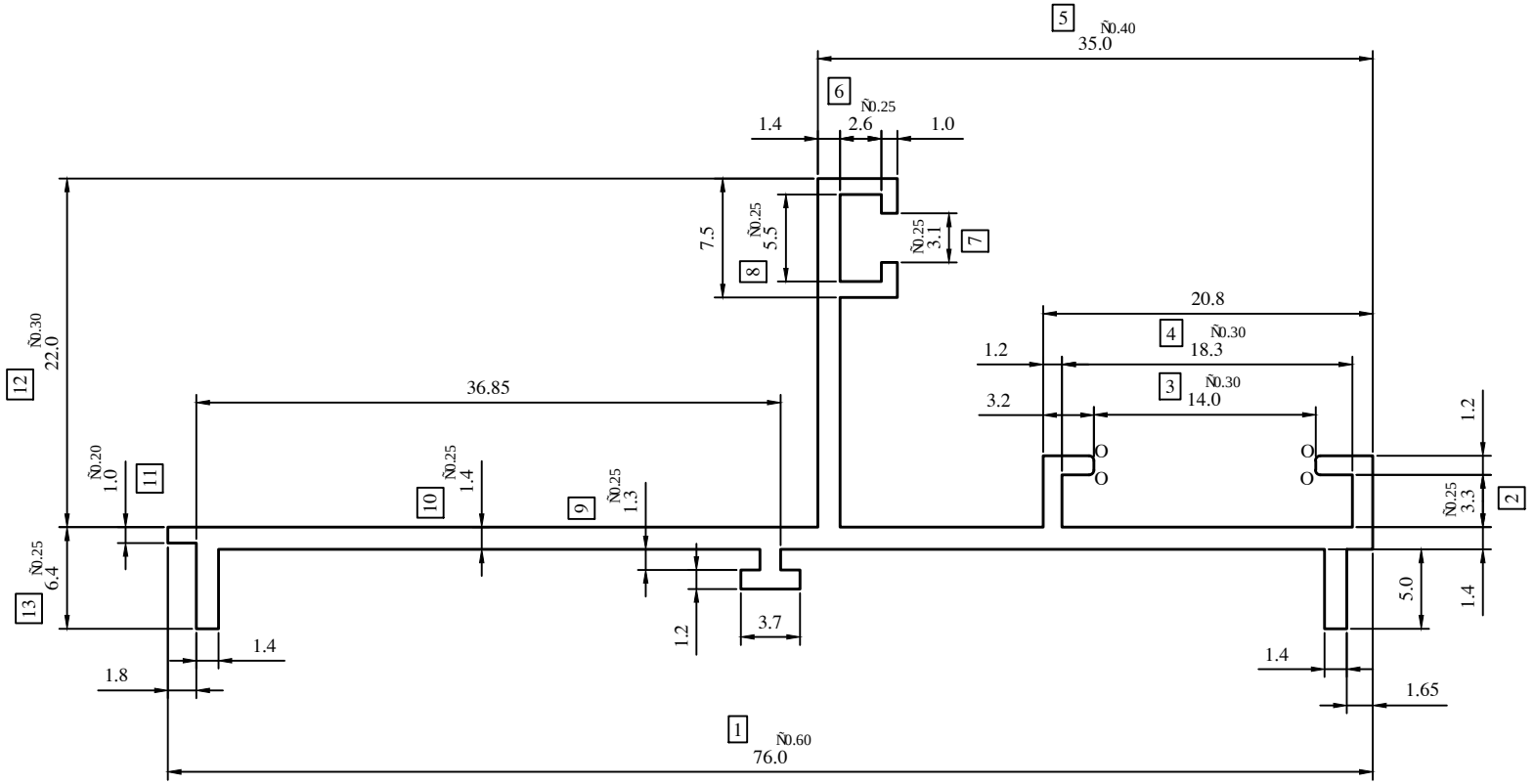

NOTE:-

O= 0.30R

FLATNESS =WIDTH X 0.005mm.
STRAIGHTNESS = 1.50 mm./mtr.
ANGULARITY =±1.5°

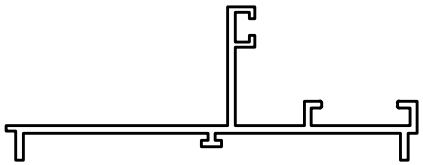

ACTUAL SIZE

JINDAL SYMBOL OF QUALITY AN ISO 9001 COMPANY	*JINDAL ALUMINIUM LTD.* *BANGALORE–560073 (INDIA)*		NAME	DATE
		DRAWN	*PARVESH*	13–12–202
		CHECKED		
		APPROVED		
1. ALL DIMENSIONS ARE IN mm. 2. ROUND OFF ALL SHARP CORNERS WITH 0.40 mm. 3. TOLERANCES WILL BE AS PER IS:3965–1981 , UNLESS OTHERWISE SPECIFIED		SCALE		4:1
		AREA mm^2		0.493
		PERIMETER mm.		273.96
		WEIGHT kg/m		0.493
PARTY'S NAME	–	DRAWING No.		SECTION No.
PARTY'S DRAWING No.	AS PER DRAWING	IAL–D–5880		–
ALLOY & TEMPER	6063 T6	46046		46046
DESCRIPTION	WINDOW SECTION			

PRODUCED BY AN AUTODESK EDUCATIONAL PRODUCT

PRODUCED BY AN AUTODESK EDUCATIONAL PRODUCT

PRODUCED BY AN AUTODESK EDUCATIONAL PRODUCT