PRODUCED BY AN AUTODESK EDUCATIONAL PRODUCT

| | |
|---|---|
| IAL–D–4274 | |
| 46052 | |

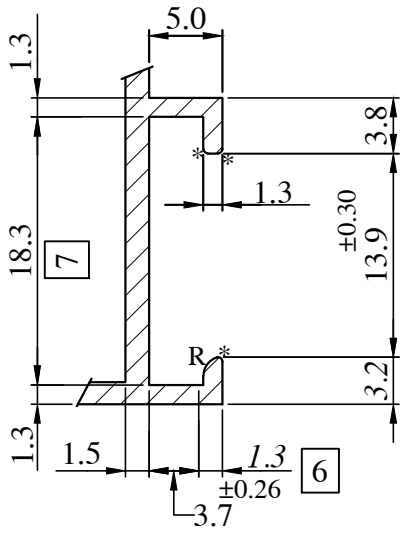


DETAILS AT- B

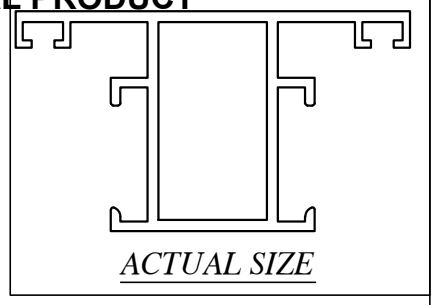


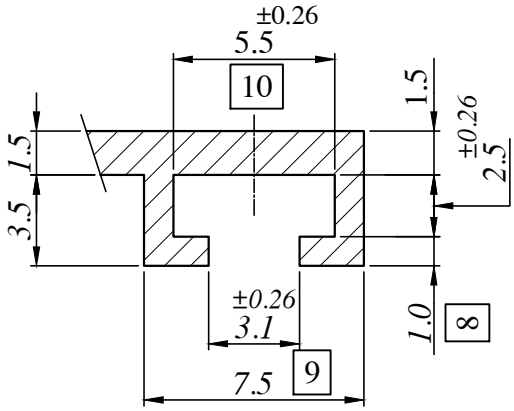


DETAILS AT- A

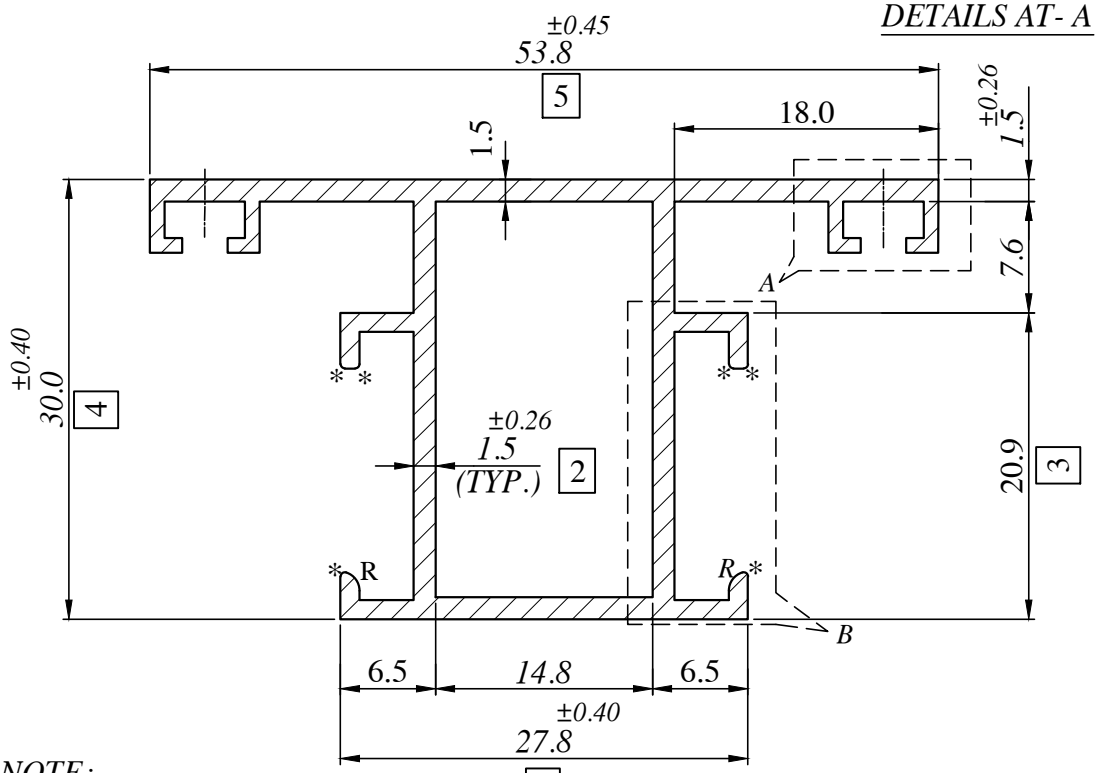


NOTE:-

R= 1.3R

*= 0.30R

TWIST = 1/4°/300M.M.M.

STRAIGHTNESS = 1.5 M.M./MTR.

ANGULARITY =±2°

| | | | |
|---|---|---|---|
| JINDAL — SYMBOL OF QUALITY AN ISO 9001 COMPANY | JINDAL ALUMINIUM LTD. BANGALORE–560073 (INDIA) | | |
| | | NAME | DATE |
| | | DRAWN | PARVESH 13–12–2021 |
| | | CHECKED | |
| | | APPROVED | |
| 1. ALL DIMENSIONS ARE IN mm. 2. ROUND OFF ALL SHARP CORNERS WITH 0.40 mm. 3. TOLERANCES WILL BE AS PER IS:6477–1983 , UNLESS OTHERWISE SPECIFIED | | SCALE | 1:1 |
| | | AREA mm² | 244.0 |
| | | PERIMETER mm. | 261.0 |
| PARTY'S NAME | – | WEIGHT kg/m | 0.660 |
| | | DRAWING No. | SECTION No. |
| PARTY'S DRAWING No. | AS PER DRAWING | IAL–D–4274 | – |
| ALLOY & TEMPER | 6063 T6 | 46052 | 46052 |
| DESCRIPTION | WINDOW SECTION | | |

PRODUCED BY AN AUTODESK EDUCATIONAL PRODUCT

PRODUCED BY AN AUTODESK EDUCATIONAL PRODUCT

PRODUCED BY AN AUTODESK EDUCATIONAL PRODUCT