IAL–D–5875

46054

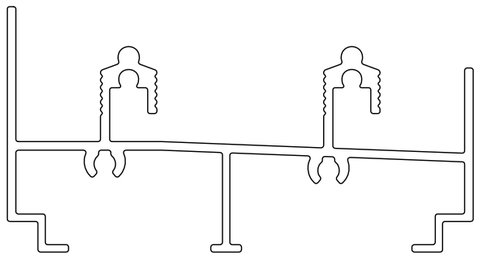

SCALE 1:1

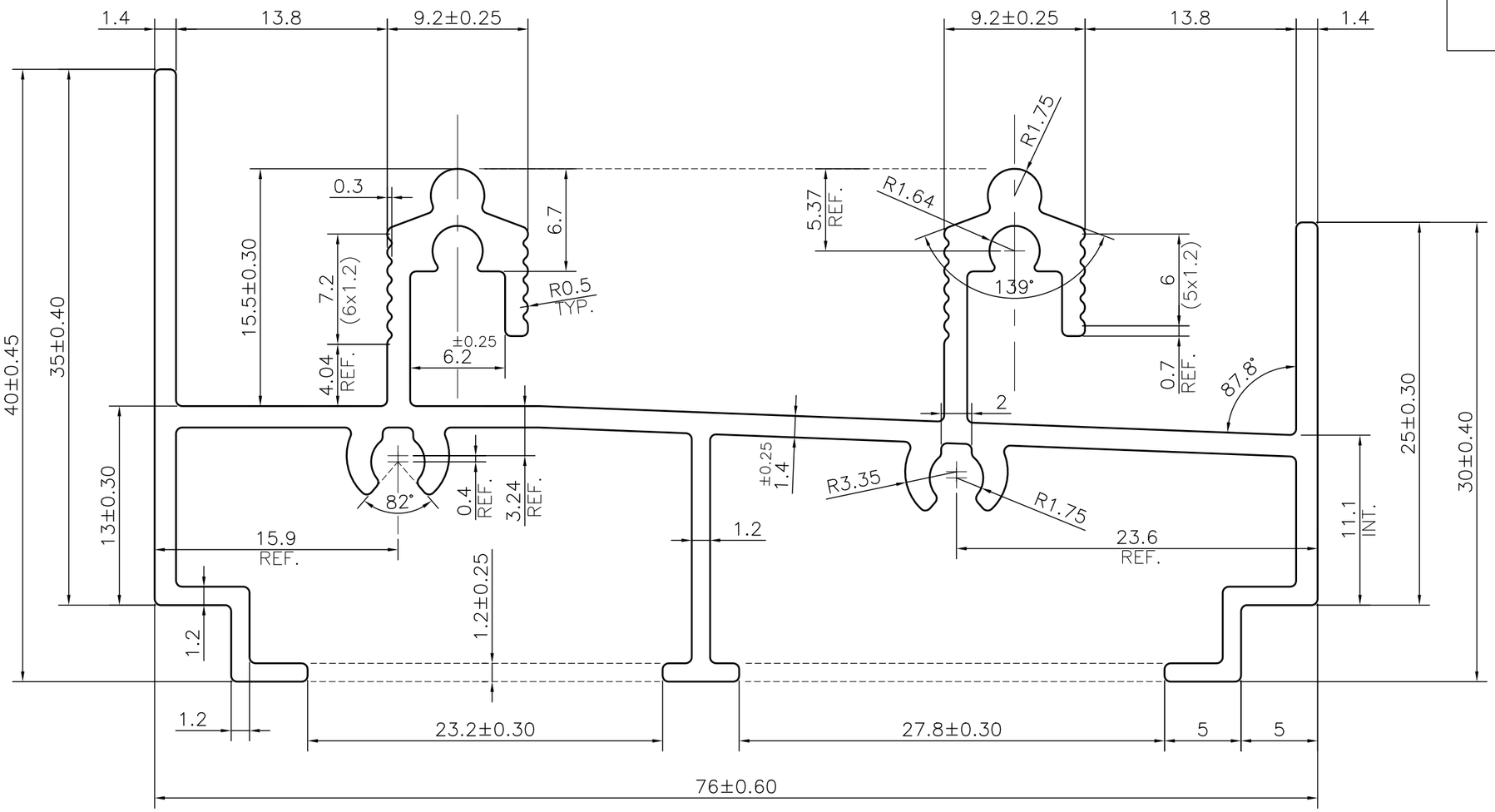

1. STRAIGHTNESS= 1.7mm/M
2. TWIST= 1.7mm/M
3. ANGULARITY= ±2°
4. FLATNESS= 0.007xWIDTH

JINDAL

SYMBOL OF QUALITY
AN ISO 9001 COMPANY

JINDAL ALUMINIUM LTD.

BHIWADI–301019 (INDIA)

	NAME	DATE
DRAWN	ASHUTOSH	16–09–2023
CHECKED		
APPROVED		

1. ALL DIMENSIONS ARE IN mm.
2. ROUND OFF ALL SHARP CORNERS WITH 0.40 mm.
3. TOLERANCES WILL BE AS PER BS:EN–755–9 , UNLESS OTHERWISE SPECIFIED

SCALE	3:1
AREA mm^2	374.696
PERIMETER mm.	505.91
WEIGHT kg/m	1.012

PARTY'S NAME	JP ASSOCIATES LTD.
PARTY'S DRAWING No.	AS PER DRAWING
ALLOY & TEMPER	6063 T6 — PRODUCT CODE:–048, HSN CODE:– 76042990
DESCRIPTION	WINDOW SECTION

DRAWING No.	SECTION No.
IAL–D–5875	–
46054	46054