PRODUCED BY AN AUTODESK EDUCATIONAL PRODUCT

IAL-D-6918	
46063	

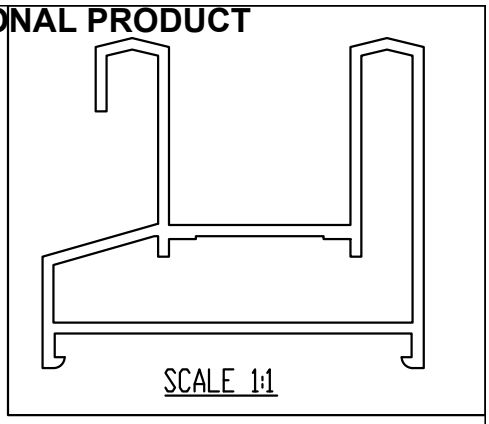

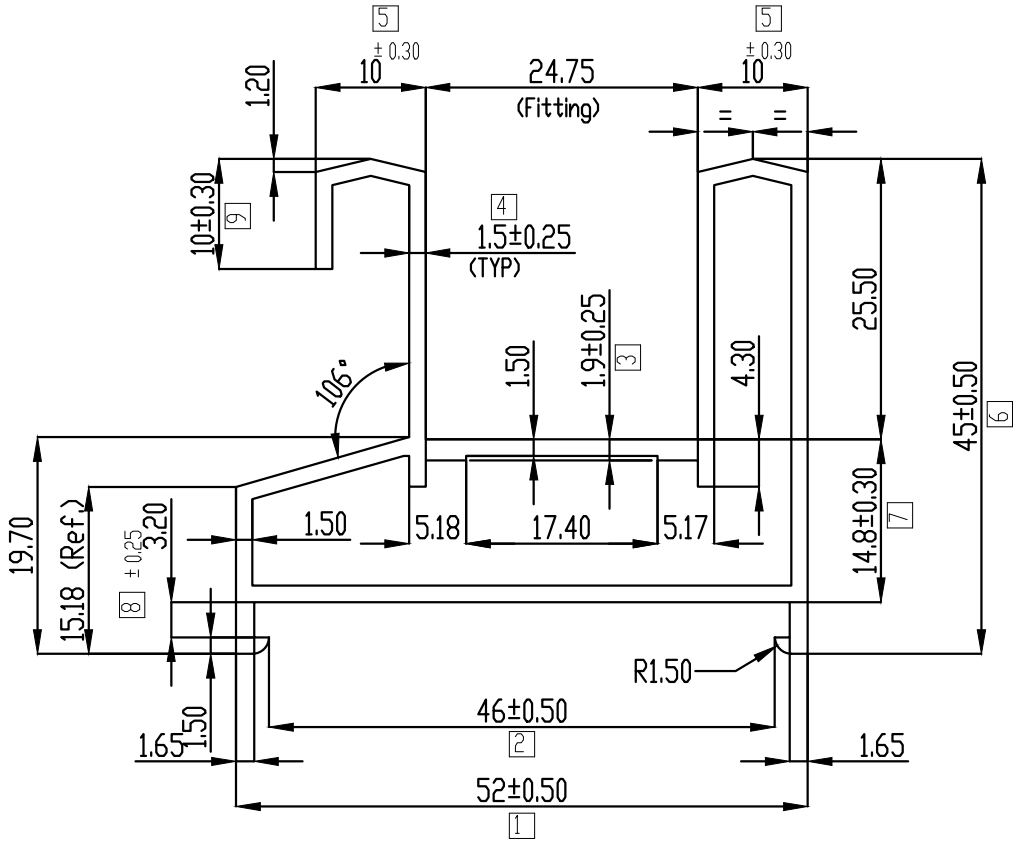

TWIST = ±1/4°/300 M.M.
FLATNESS = WIDTH X 0.005mm.
STRAIGHTNESS = 1.50 M.M./MTR.
ANGULARITY = ±1.5°

			NAME	DATE
JINDAL SYMBOL OF QUALITY AN ISO 9001 COMPANY	*JINDAL ALUMINIUM LTD.* *BANGALORE-560073 (INDIA)*	DRAWN	*PARVESH*	15-12-2021
		CHECKED		
		APPROVED		

1. ALL DIMENSIONS ARE IN mm.
2. ROUND OFF ALL SHARP CORNERS WITH 0.40 mm.
3. TOLERANCES WILL BE AS PER IS:6477-1983 , UNLESS OTHERWISE SPECIFIED

SCALE	1.5:1
AREA mm^2	350.80
PERIMETER mm.	282.83
WEIGHT kg/m	0.947

PARTY'S NAME	–
PARTY'S DRAWING No.	AS PER DRAWING
ALLOY & TEMPER	6063 T6
DESCRIPTION	WINDOW SECTION

DRAWING No.	SECTION No.
IAL-D-6918	–
46063	46063

PRODUCED BY AN AUTODESK EDUCATIONAL PRODUCT
PRODUCED BY AN AUTODESK EDUCATIONAL PRODUCT
PRODUCED BY AN AUTODESK EDUCATIONAL PRODUCT