IAL–D–624
46067

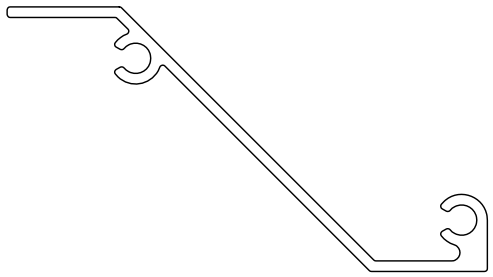

SCALE 1:1

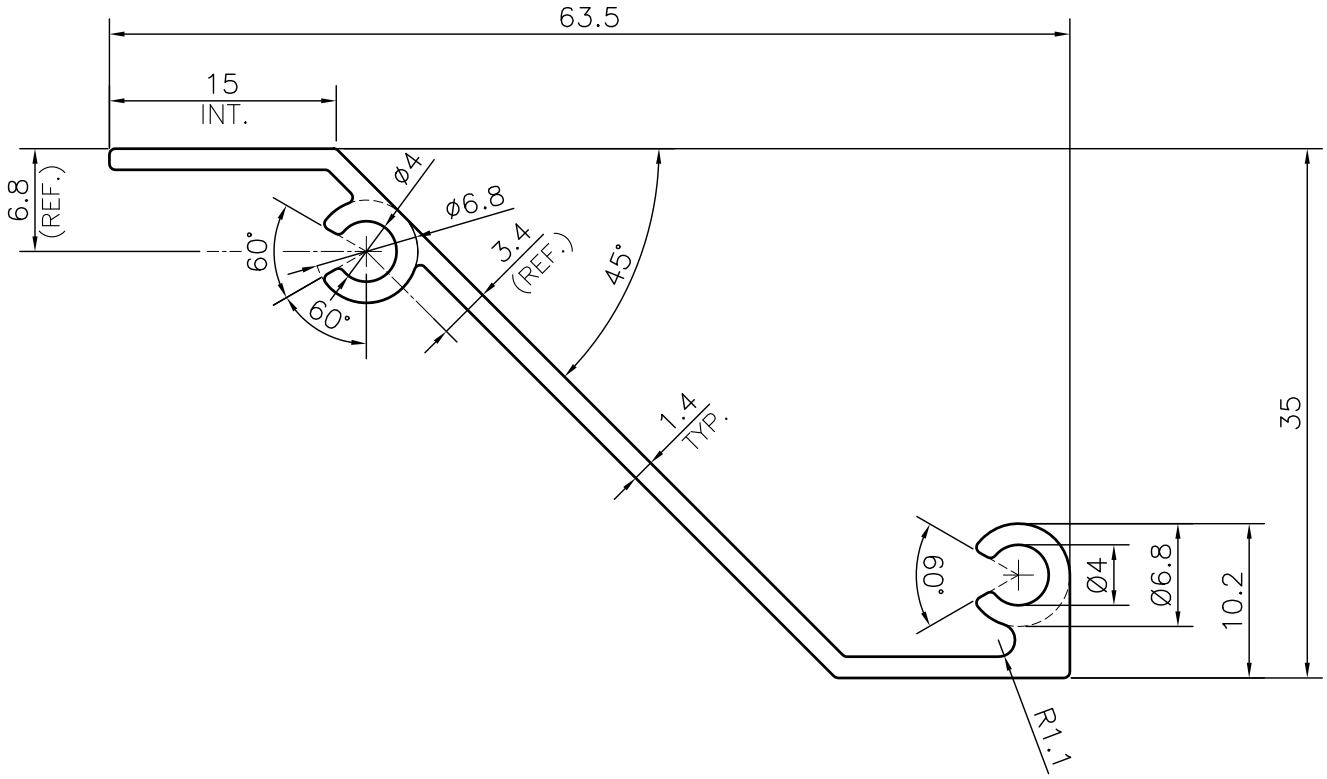

1. STRAIGHTNESS= 1.7mm/M
2. TWIST= 1.7mm/M
3. ANGULARITY= ±2°
4. FLATNESS= 0.007xWIDTH

JINDAL

SYMBOL OF QUALITY
AN ISO 9001 COMPANY

JINDAL ALUMINIUM LTD.

BHIWADI–301019 (INDIA)

	NAME	DATE
DRAWN	ASHUTOSH	19–01–2024
CHECKED		
APPROVED		

1. ALL DIMENSIONS ARE IN mm.
2. ROUND OFF ALL SHARP CORNERS WITH 0.40 mm.
3. TOLERANCES WILL BE AS PER BS:EN–755–9 , UNLESS OTHERWISE SPECIFIED

SCALE	2:1
AREA mm^2	152.553
PERIMETER mm.	202.27
WEIGHT kg/m	0.412

PARTY'S NAME	–
PARTY'S DRAWING No.	AS PER DRAWING
ALLOY & TEMPER	6063 T5 — PRODUCT CODE:–048 — HSN CODE:– 76042990
DESCRIPTION	LOUVER SECTION

DRAWING No.	SECTION No.
IAL–D–624	–
46067	46067