IAL–D–4731	
46079	

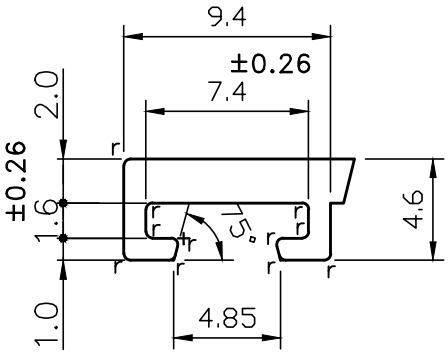

DETAIL AT– A

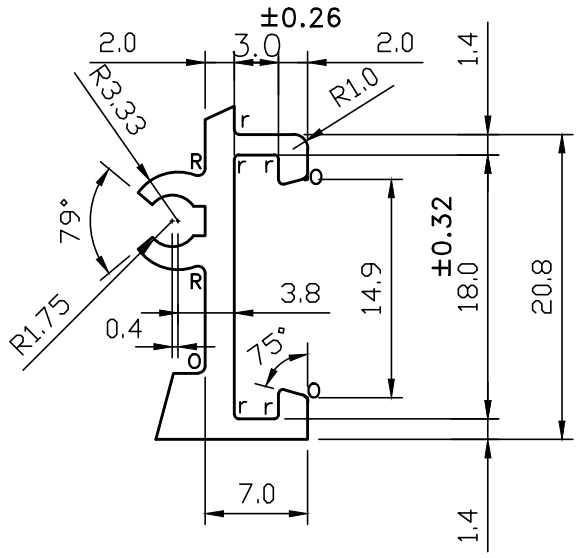

DETAIL AT– B

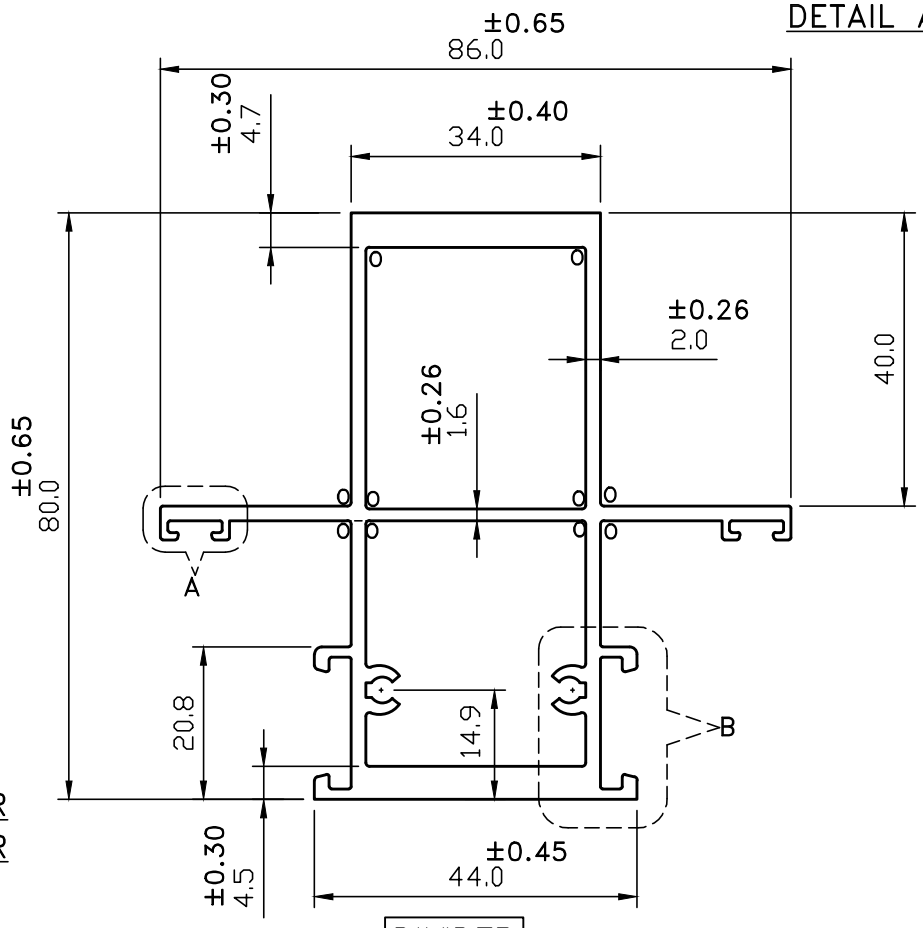

DIVIDER

NOTE:–

r= 0.30R

O= 0.50R

R= 1.00R

JINDAL SYMBOL OF QUALITY AN ISO 9001 COMPANY	*JINDAL ALUMINIUM LTD.* *BANGALORE–560073 (INDIA)*		NAME	DATE
		DRAWN	*S.K.SHARMA*	27–01–2022
		CHECKED		
		APPROVED		

1. ALL DIMENSIONS ARE IN mm.
2. ROUND OFF ALL SHARP CORNERS WITH 0.40 mm.
3. TOLERANCES WILL BE AS PER BS:EN–755–9 , UNLESS OTHERWISE SPECIFIED

SCALE	1:1
AREA mm^2	836.0
PERIMETER mm.	411.0
WEIGHT kg/m	2.257

PARTY'S NAME	M/S.AAP DIVISION
PARTY'S DRAWING No.	AS PER DRAWING
ALLOY & TEMPER	6063 T6
DESCRIPTION	WINDOW SECTION

DRAWING No.	SECTION No.
IAL–D–4731	–
46079	46079