IAL–D–998
46080

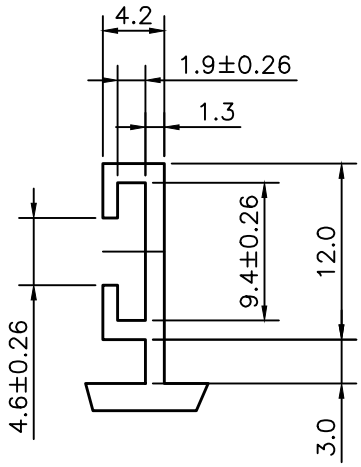

DETAIL AT–A

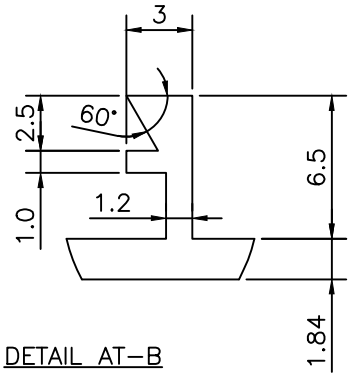

DETAIL AT–B

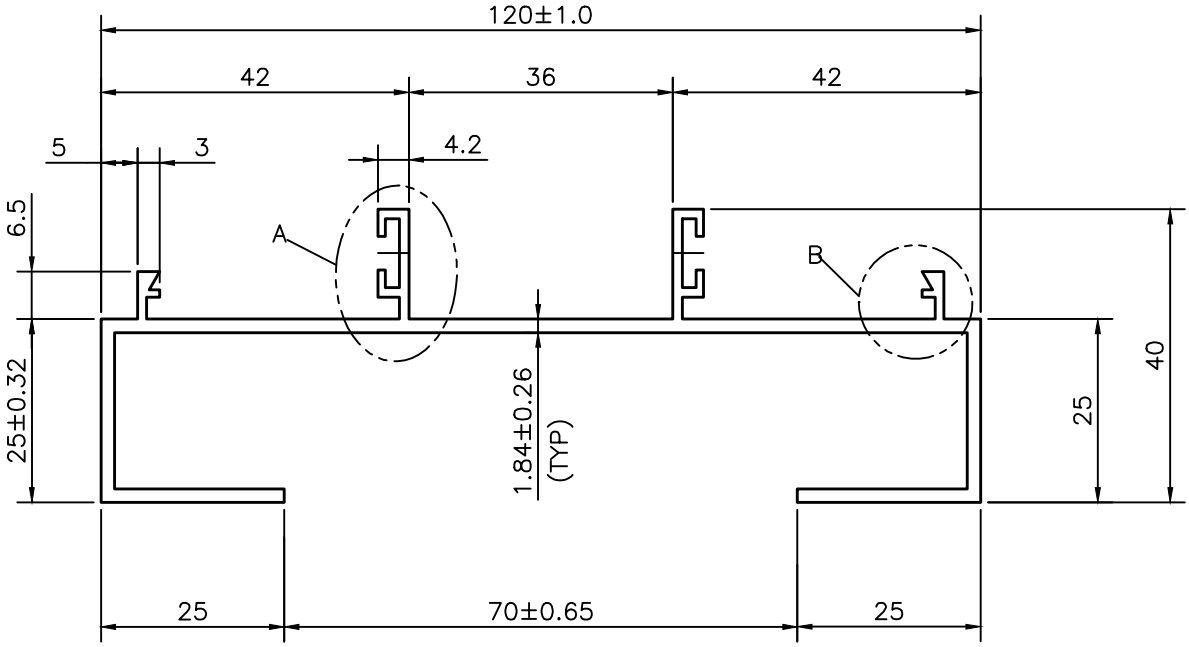

JINDAL SYMBOL OF QUALITY AN ISO 9001 COMPANY	*JINDAL ALUMINIUM LTD.* *BANGALORE–560073 (INDIA)*		NAME	DATE
		DRAWN	*S.K.SHARMA*	27–01–2022
		CHECKED		
		APPROVED		

1. ALL DIMENSIONS ARE IN mm.
2. ROUND OFF ALL SHARP CORNERS WITH 0.40 mm.
3. TOLERANCES WILL BE AS PER BS:EN–755–9 , UNLESS OTHERWISE SPECIFIED

SCALE	1:1
AREA mm^2	479.53
PERIMETER mm.	468.22
WEIGHT kg/m	1.295

PARTY'S NAME	M/S.AAP DIVISION
PARTY'S DRAWING No.	AS PER DRAWING
ALLOY & TEMPER	6063 T6
DESCRIPTION	–

DRAWING No.	SECTION No.
IAL–D–998	–
46080	46080