MAL NO.–11743
–
B–903

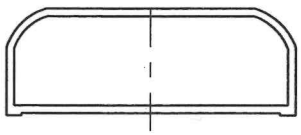

SCALE 1:1

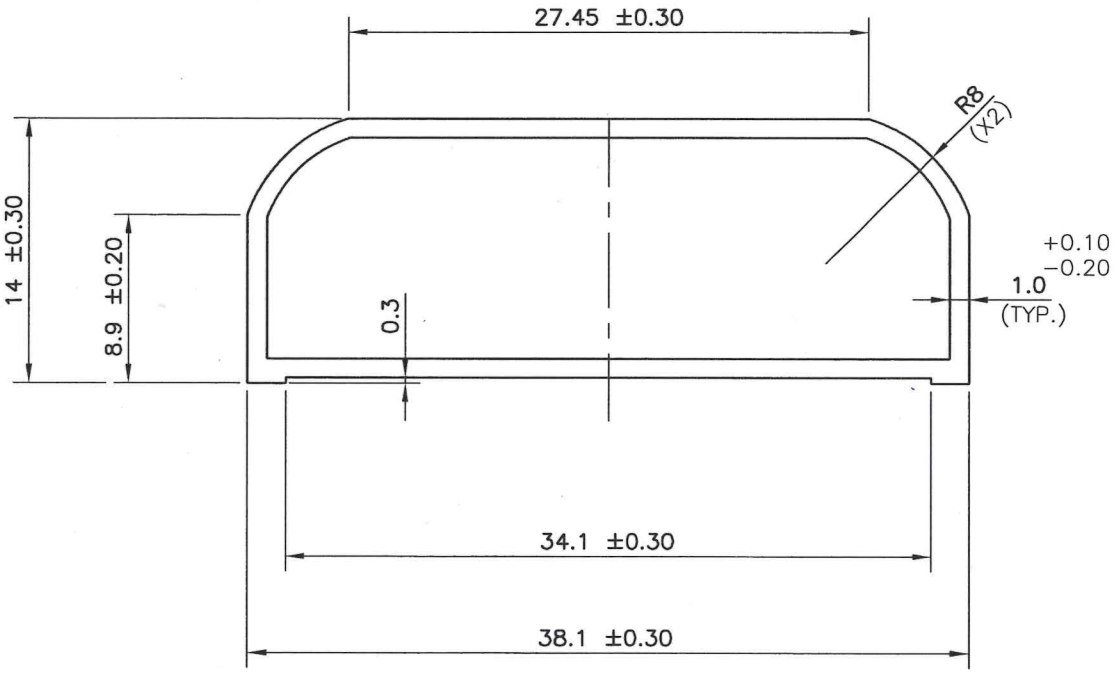

TWIST= ±1/4°/300M.M./M.
FLATNESS=WIDTHX0.005mm.
STRAIGHTNESS= 1.5 M.M./MTR.
ANGULARITY= ±1.5°

JINDAL
SYMBOL OF QUALITY
AN ISO 9001 COMPANY

JINDAL ALUMINIUM LTD.

BANGALORE–560073 (INDIA)

	NAME	DATE
DRAWN	*ASHUTOSH*	03–06–2022
CHECKED		3-6-2022
APPROVED		04.06.22

1. ALL DIMENSIONS ARE IN mm.
2. ROUND OFF ALL SHARP CORNERS WITH 0.40 mm.
3. TOLERANCES WILL BE AS PER BS:EN–755–9 , UNLESS OTHERWISE SPECIFIED

SCALE	1:1&2.5:1
AREA mm^2	95.70
PERIMETER mm.	99.28
WEIGHT kg/m	0.258

PARTY'S NAME	M/S. COMPLETE SURVEYING
PARTY'S DRAWING No.	AS PER DRAWING (B–798)
ALLOY & TEMPER	6063–T6
DESCRIPTION	––

DRAWING No.	SECTION No.
MAL NO. 11743	B–903
–	–