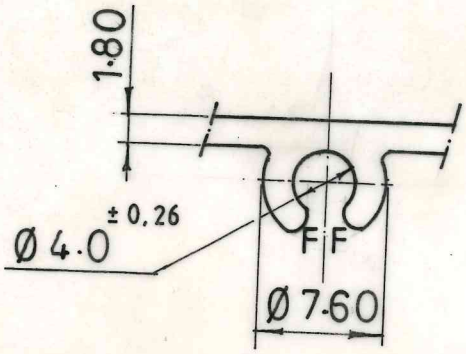

Detail At:— C

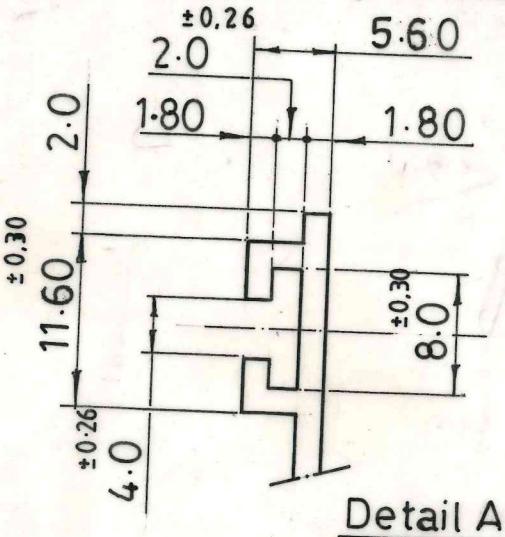

Detail At:– D

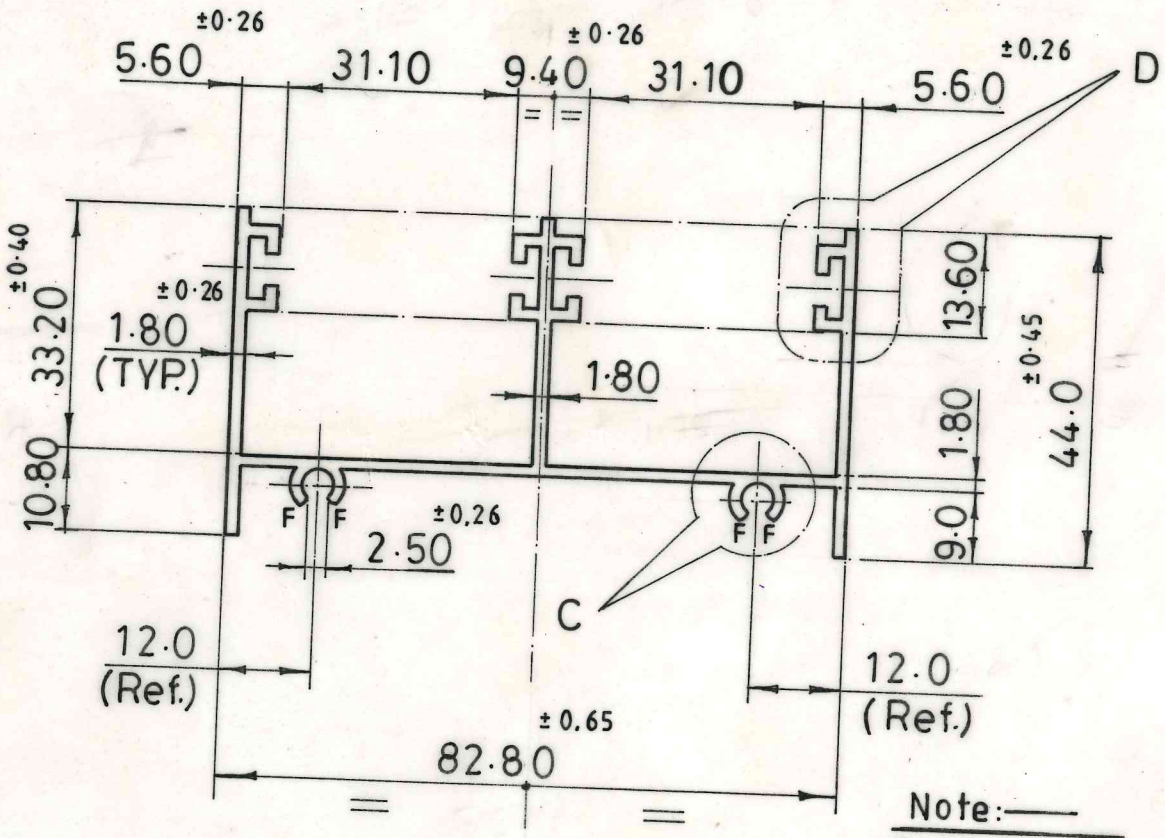

Note:—
F = Full Radius

LOCATION:- P. 1-1H.
UNSPECIFIED TOL. = ±0.2
ALL DIMENSIONS ARE IN M.M.
UNSPECIFIED CORNER RADIUS: 0.40

TOL AS PER B.S.1474:1987
UNLESS SPECIFIED

TWIST = 1/4° /300 m.m.
STRAIGHTNESS = ±2.5 m.m./Meter
ANGULARITY = ±2°
FLATNESS = ±——

MAHAVIR ALUMINIUM LIMITED BHIWADI-301019

Party: Sample/Drg no. SAMPLE		Party Name M/S. RAM AVTAR & CO.		Ref. no. AS PER SAMPLE:- Dt. 19.1.2001	
		Drawn Anand Sharma	20.1.2001	EST. AREA	483.0 m.m.²
		Checked	24/1/01	EST. WEIGHT	1.304 Kg./M.
		APPROVED	24/1/01	Wt. Range	——
		Scale. 1:1 & 2:1	Date	Alloy	6063
00		CRITICAL DIMN ✳		MAL. NO.	7235
Rev. status / Rev. no.	DESCRIPTION	Sign/date	Perimeter INT. —— EXT. 535.7	SEC. NO.	D - 3141
REVISION					