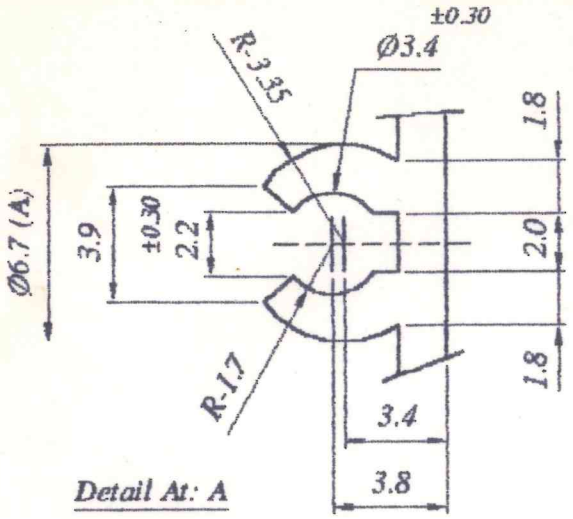

Detail At: A

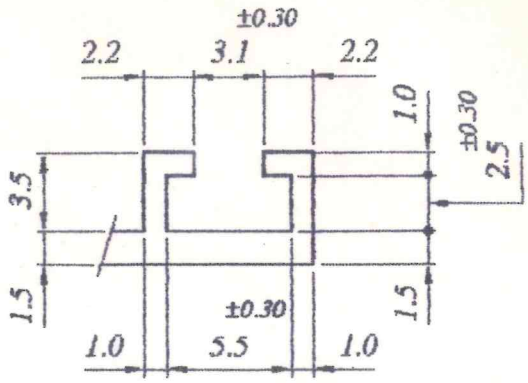

Detail At:-B

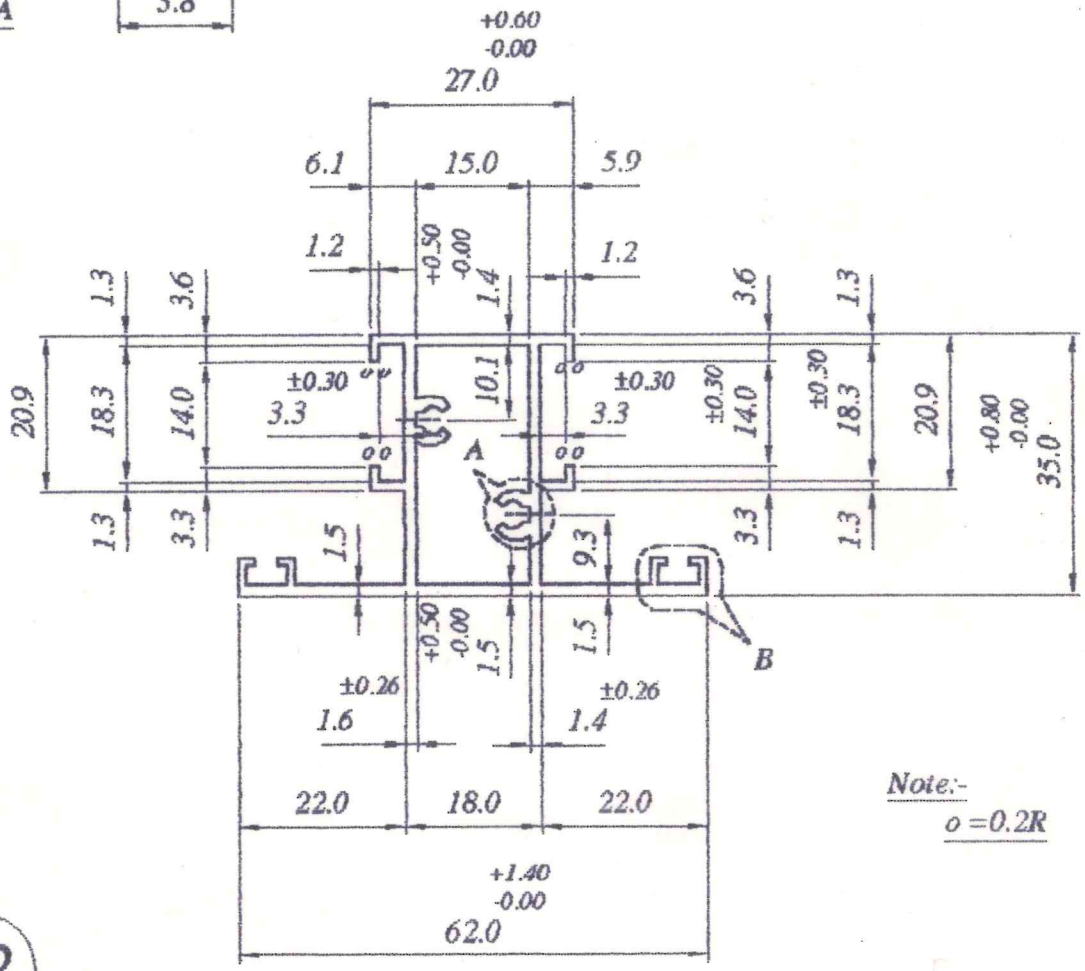

Note:-
o =0.2R

F2

LOCATION:- P2-1H.

ALL DIMENSION ARE IN M.M.
UNSPECIFIED CORNER RADIUS:0.40

TOL. AS PER B.S.1474:1987
UNLESS SPECIFIED

TWIST =1/4"/300 M.M./M.
STRAIGHTNESS= 1.5 M.M./MTR.
ANGULARITY = 2°

MAHAVIR ALUMINIUM LIMITED BHIWADI-301019

PARTY SAMPLE & DRG.	F2-41	PARTY NAME	M/S. STAR ALUBUILD			REF.No. AS PER MKT I.O.M.-873 / Dt.-22.07.05	
				DRAWN ANAND SHARMA	13.08.05	AREA: 297.0	MM²
				CHECKED	6.9.005	WEIGHT: 0.801	KG/M.
				APPROVED		WT. RANGE: --------	Kg/12'
	(A)	DIM.-Ø6.7 WAS Ø6.6 m.m.		SCALE 1:1&3:1	DATE	ALLOY: 6063	
001	(Ref.)	AS PER APPROVED DRG. Dt.-03.09.05		CRITICAL DIM. *		MAL.No. 9255	
REV. STATUS	REV. NO.	DESCRIPTION	SIGN DATE	PERIMETER	INT. 129.0	SEC.NO.	D-3883
REVISION					EXT. 284.2		