REV. STATUS	REV. NO.	DESCRIPTION
	(F)	DIM. 15.00 WAS 15.10mm.
	(E)	DIM. 7.30 WAS 7.20mm.
	(D)	DIM. 37.10 WAS 36.80mm.
	(C)	DIM. 65.20 WAS 65.00mm.
002	(REV.)	AS PER MKT. I.O.M. Dt.-22.06.06

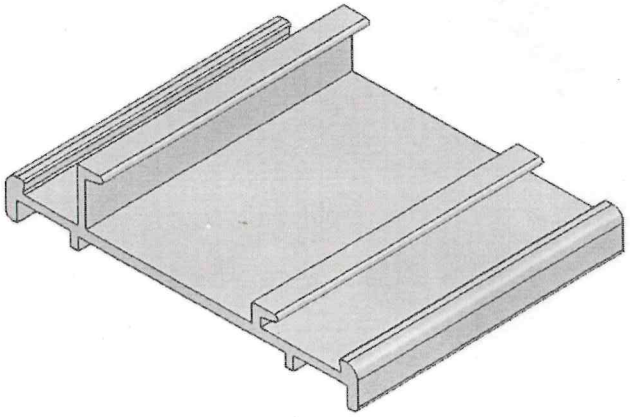

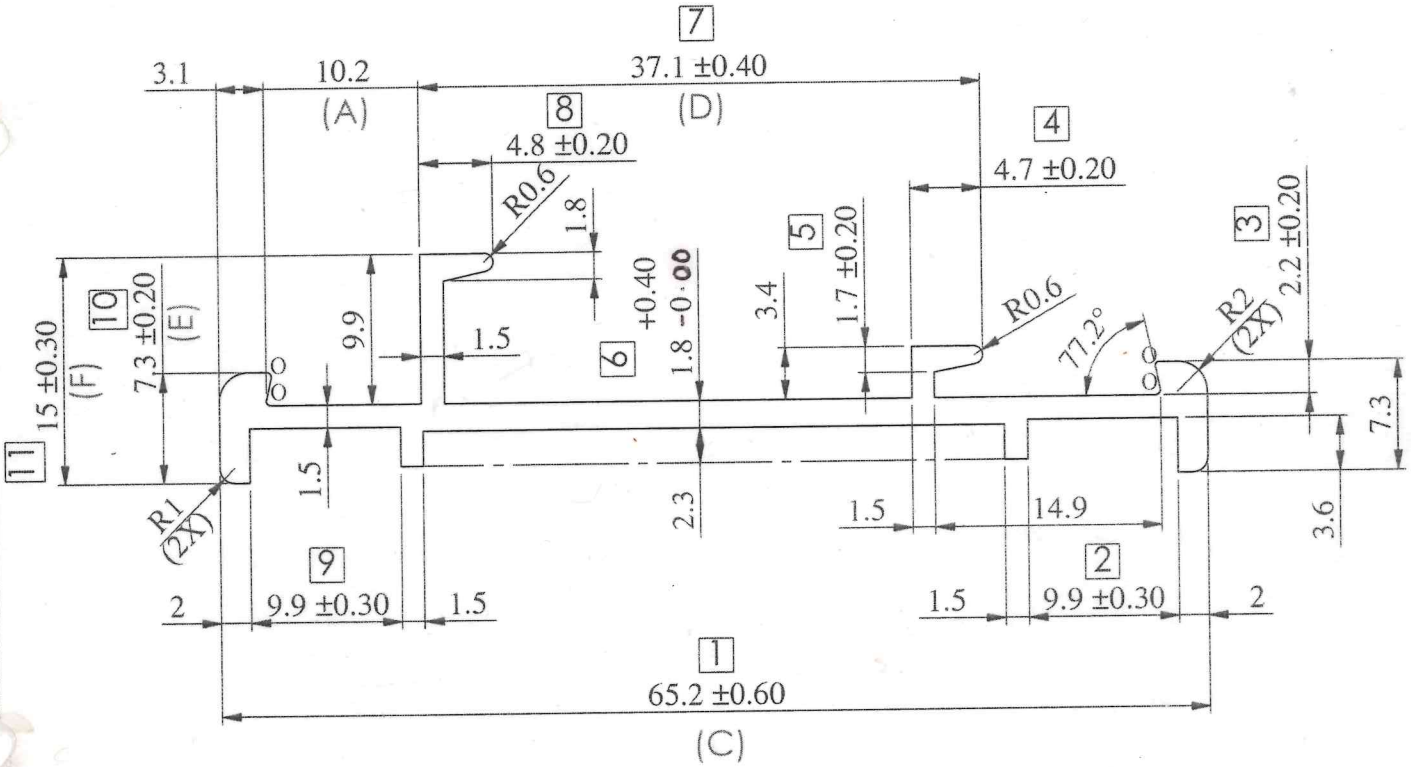

NOTE:-
O= 0.30R

LOCATION:-P2 - 2HOLE
ALL DIMENSION ARE IN M.M.
UNSPECIFIED CORNER RADIUS:0.40

TOL. AS PER BS EN 755-9:2008
UNLESS SPECIFIED

TWIST □=±1/4°/300 M.M./M.
STRAIGHTNESS □= 1.50 M.M./MTR.
ANGULARITY □=±1.5°

INDO ALUSYS INDUSTRIES LIMITED BHIWADI RAJASTHAN - 301019

PARTY SAMPLE & DRG.	DRG.-C	PARTY NAME	M/S UNICOS	REF:-AS PER MKT. I.O.M. Dt.-26.05.06

				DRAWN	DHARMVIR	17.08.11	AREA	171.80	MM²
				CHECKED		19.8.11	WEIGHT	0.464	KG/M.
	(B)	DIM. 36.90 WAS 36.80mm.		APPROVED		19.8.11	WT. RANGE	-------	Kg/12'
	(A)	DIM. 10.20 WAS 10.30mm.		SCALE	1:1 & 2:1	DATE	ALLOY	6063	
001	(REF.)	AS PER MKT. I.O.M. Dt.-22.06.06		CRITICAL DIM.	*		MAL NO	9580	
REV. STATUS	REV. NO.	DESCRIPTION	SIGN DATE	PERIMETER	INT.		SEC.NO.	D-4035	
REVISION					EXT.	201.16			