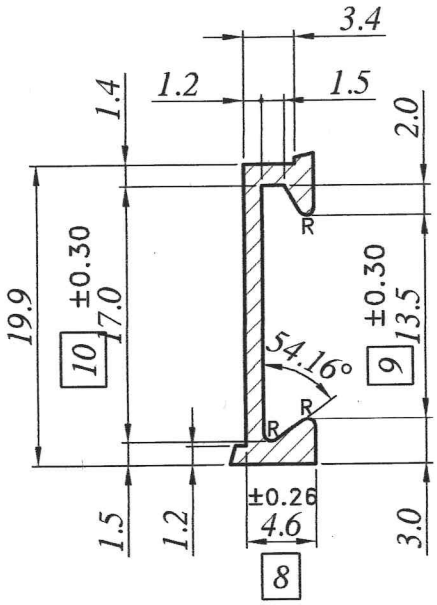

DETAIL AT- A

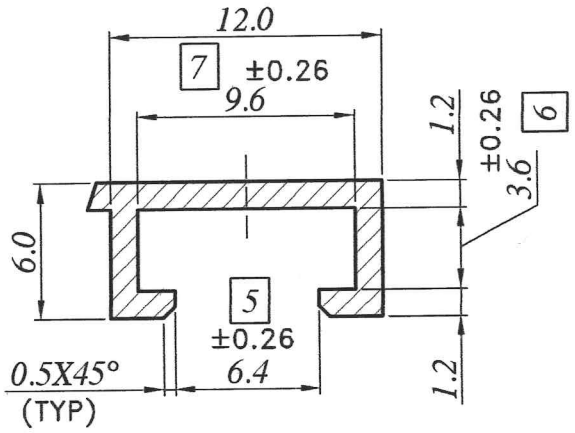

DETAIL AT- B

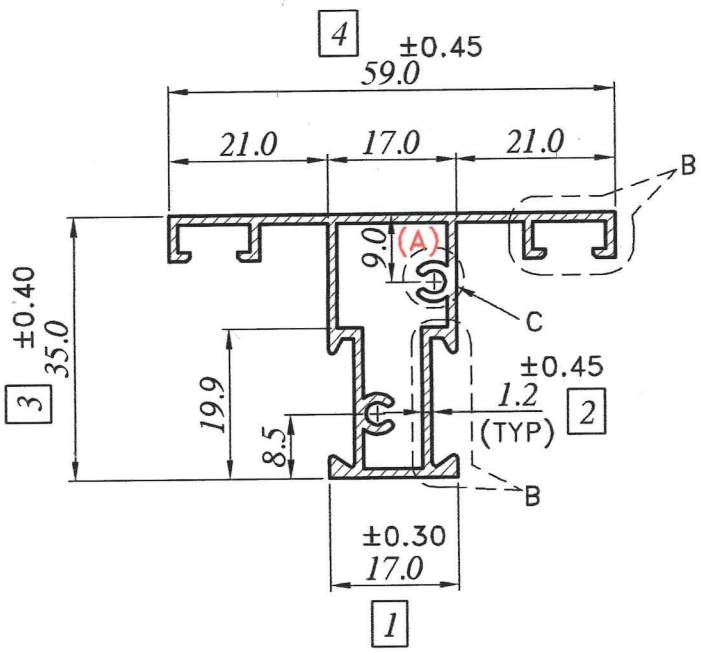

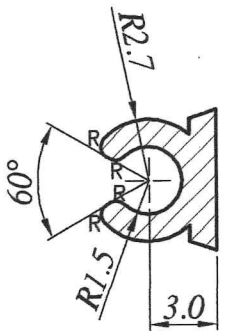

DETAIL AT- C

NOTE:-
R= 0.50R

LOCATION:- P2 - 1HOLE
ALL DIMENSION ARE IN M.M.
UNSPECIFIED CORNER RADIUS:0.40

TOL. AS PER B.S.1474:1987
UNLESS SPECIFIED

TWIST = 1/4°/300M.M.M.
STRAIGHTNESS = 1.5 M.M./MTR.
ANGULARITY =±2°

INDO ALUSYS INDUSTRIES LIMITED BHIWADI RAJASTHAN - 301019

PARTY SAMPLE & DRG.	BTAL-54	PARTY NAME	M/S BESTECH				REF:-AS PER DRG. Dt-16.12.08		
				DRAWN	DHARMVIR	17.12.08	AREA	242.50	MM²
				CHECKED		7.1.09	WEIGHT	0.657	KG/M.
				APPROVED		7.1.09	WT. RANGE	-------	Kg/12'
	(A)	DIM. 9.00 WAS 8.50		SCALE	1:1,2:1&3:1	DATE	ALLOY	6063-T6	
001	(REF.)	AS PER EMAIL ON Dt-27.12.08		CRITICAL DIM.	*		MAL NO	10873	
REV. STATUS	REV. NO.	DESCRIPTION	SIGN DATE	PERIMETER	INT.	124.30	SEC.NO.	D-4554	
		REVISION			EXT.	260.50			