MAL NO-10888

D4564

SCALE 1:1

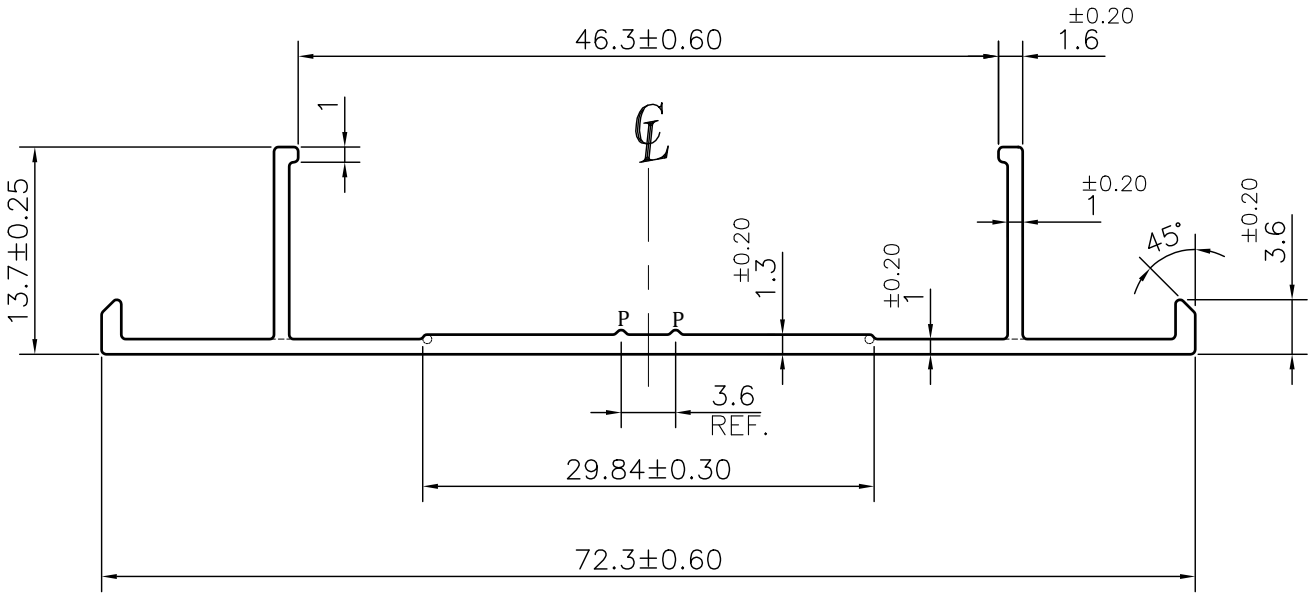

☞ ROUND OFF ALL SHARP CORNERS WITH 0.30 mm.

NOTE:-
P= 0.3x90° PIP (2 PLACES)

1. STRAIGHTNESS= 1.7mm/M
2. TWIST= 1.7mm/M
3. ANGULARITY= ±2°
4. FLATNESS= 0.007xWIDTH

JINDAL

SYMBOL OF QUALITY
AN ISO 9001 COMPANY

JINDAL ALUMINIUM LTD.

BHIWADI-301019 (INDIA)

	NAME	DATE
DRAWN	ASHUTOSH	10-10-2023
CHECKED		
APPROVED		

1. ALL DIMENSIONS ARE IN mm.
2. ROUND OFF ALL SHARP CORNERS WITH 0.40 mm.
3. TOLERANCES WILL BE AS PER BS:EN-755-9 , UNLESS OTHERWISE SPECIFIED

SCALE	2:1
AREA mm^2	114.104
PERIMETER mm.	207.42
WEIGHT kg/m	0.308

PARTY'S NAME	S.M.W
PARTY'S DRAWING No.	AS PER DRAWING
ALLOY & TEMPER	6063 T6 — PRODUCT CODE:-085 — HSN CODE:- 76042990
DESCRIPTION	INDUSTRIAL SECTION

DRAWING No.	SECTION No.
MAL NO-10888	-
D4564	D4564