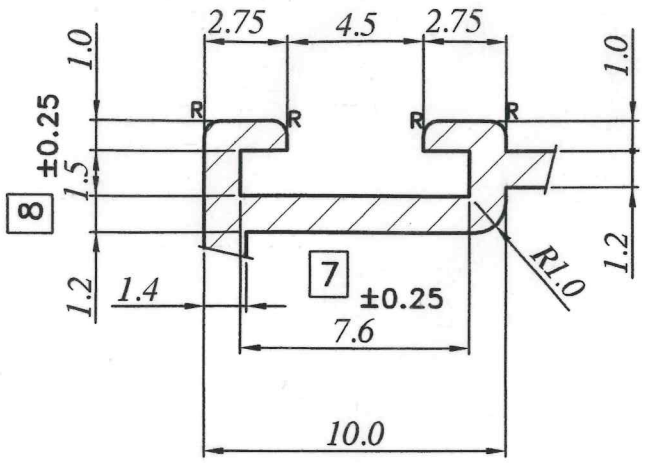

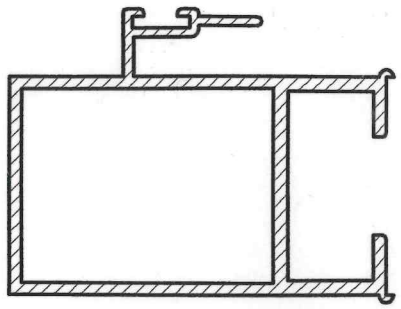

ACTUAL SIZE

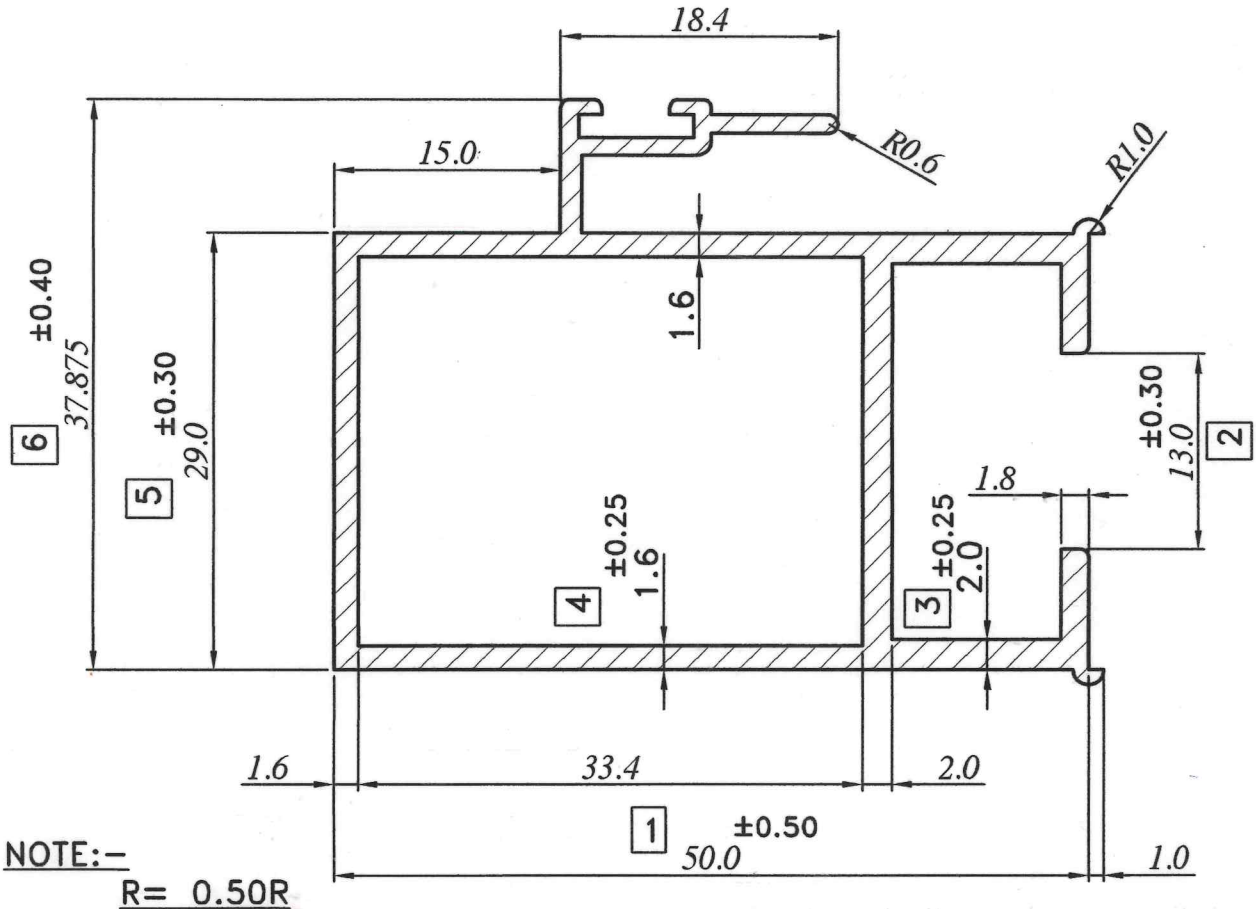

NOTE:-
R= 0.50R

LOCATION:-P2 - 1HOLE
ALL DIMENSION ARE IN M.M.
UNSPECIFIED CORNER RADIUS:0.40

TOL. AS PER BS EN 755-9:2008
UNLESS SPECIFIED

TWIST =±1/4°/300 M.M./M.
STRAIGHTNESS = 1.50 M.M./MTR.
ANGULARITY =±1.5°

INDO ALUSYS INDUSTRIES LIMITED BHIWADI RAJASTHAN - 301019

PARTY SAMPLE & DRG.	BATL-86	PARTY NAME	M/S BESTECH				REF:-AS PER EMAIL ON Dt.-02.12.10		
				DRAWN	DHARMVIR	08.12.10	AREA	325.75	MM²
				CHECKED		25.12.10	WEIGHT	0.880	KG/M.
				APPROVED		25.12.10	WT. RANGE	-------	Kg/12'
				SCALE	1:1,2:1&4:1	DATE	ALLOY	6063-T6	
00	(REF.)			CRITICAL DIM.	*		MAL NO	12007	
REV. STATUS	REV. NO.	DESCRIPTION	SIGN DATE	PERIMETER	INT.	118.40	SEC.NO.	D-5107	
		REVISION			EXT.	275.00			