| MAL-12064 |
|---|
| D5122 |
| |

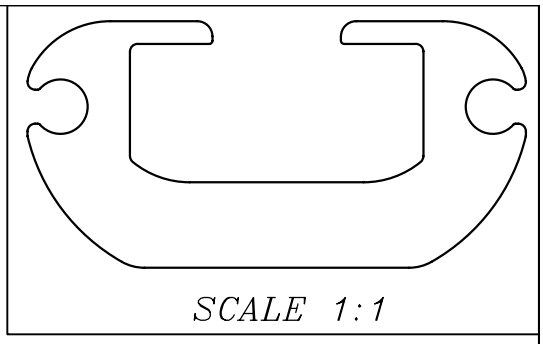


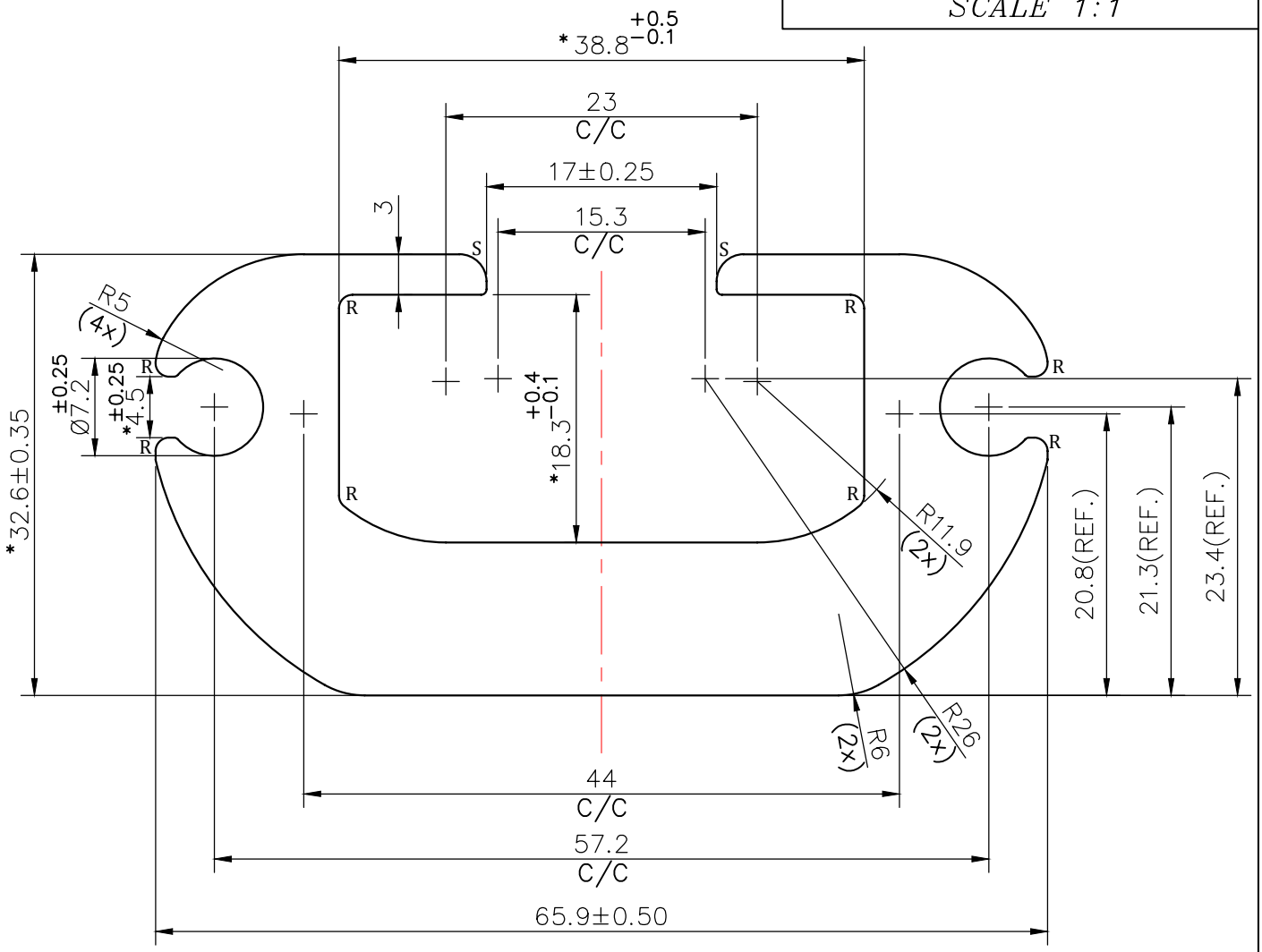


**NOTE:-**
**R= 1.0 RADIUS (6 PLACES)**
**S= 2.0 RADIUS (2 PLACES)**

☞ ***= CRITICAL DIM. (4 PLACES)**
☞ **MINIMUM HARDNESS= 77BARCOL OR 84HB**

1. STRAIGHTNESS= 1.7mm/M
2. TWIST= 1.7mm/M
3. ANGULARITY= ±2°
4. FLATNESS= 0.007xWIDTH

JINDAL
SYMBOL OF QUALITY
AN ISO 9001 COMPANY

*JINDAL ALUMINIUM LTD.*
*BHIWADI-301019 (INDIA)*

| | NAME | DATE |
|---|---|---|
| DRAWN | ASHUTOSH | 17-07-2023 |
| CHECKED | | |
| APPROVED | | |

1. ALL DIMENSIONS ARE IN mm.
2. ROUND OFF ALL SHARP CORNERS WITH 0.40 mm.
3. TOLERANCES WILL BE AS PER BS:EN-755-9 , UNLESS OTHERWISE SPECIFIED

| | |
|---|---|
| SCALE | 2:1 |
| AREA $mm^2$ | 1096.97 |
| PERIMETER mm. | 281.51 |
| WEIGHT kg/m | 2.962 |

| | |
|---|---|
| PARTY'S NAME | ENSTO INDIA PVT. LTD. |
| PARTY'S DRAWING No. | AS PER DRAWING |
| ALLOY & TEMPER | 6005 T6 |
| DESCRIPTION | INDUSTRIAL SECTION |

| DRAWING No. | SECTION No. |
|---|---|
| MAL-12064 | |
| D5122 | D5122 |
| | |
| | |
| | |