MAL NO.–12411
D5277

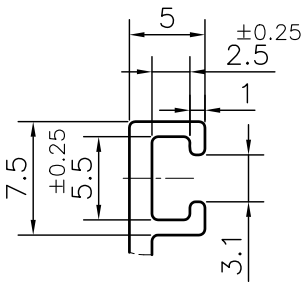

DETAIL A
SCALE 2:1

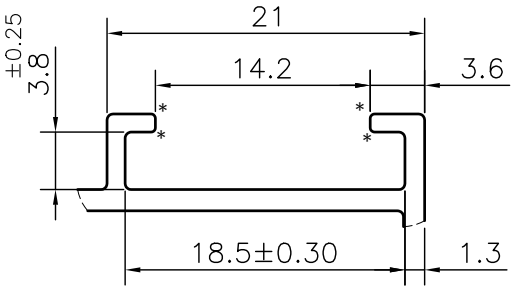

DETAIL B
SCALE 2:1

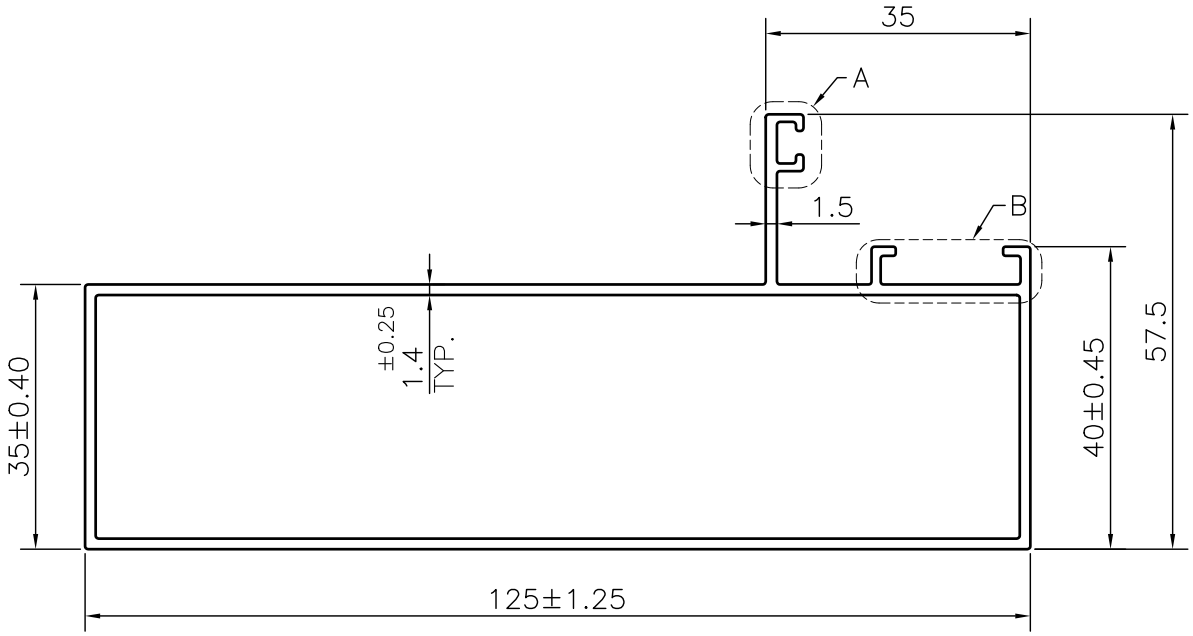

NOTE:-
***= 0.30 RADIUS (4 PLACES)**

1. STRAIGHTNESS= 1.7mm/M
2. TWIST= 1.7mm/M
3. ANGULARITY= ±2°
4. FLATNESS= 0.007xWIDTH

JINDAL
SYMBOL OF QUALITY
AN ISO 9001 COMPANY

JINDAL ALUMINIUM LTD.

BHIWADI–301019 (INDIA)

	NAME	DATE
DRAWN	ASHUTOSH	29–11–2023
CHECKED		
APPROVED		

1. ALL DIMENSIONS ARE IN mm.
2. ROUND OFF ALL SHARP CORNERS WITH 0.40 mm.
3. TOLERANCES WILL BE AS PER BS:EN–755–9 , UNLESS OTHERWISE SPECIFIED

SCALE	1:1
AREA mm^2	501.03
PERIMETER mm.	407.765
WEIGHT kg/m	1.353

DRAWING No.	SECTION No.
MAL NO.–12411	–
D5277	D5277

PARTY'S NAME	AAP DIVISION	
PARTY'S DRAWING No.	AS PER DRAWING	
ALLOY & TEMPER	6063 T6	PRODUCT CODE:–048 HSN CODE:– 76042100
DESCRIPTION	WINDOW SECTION	