MAL-12665
D5354

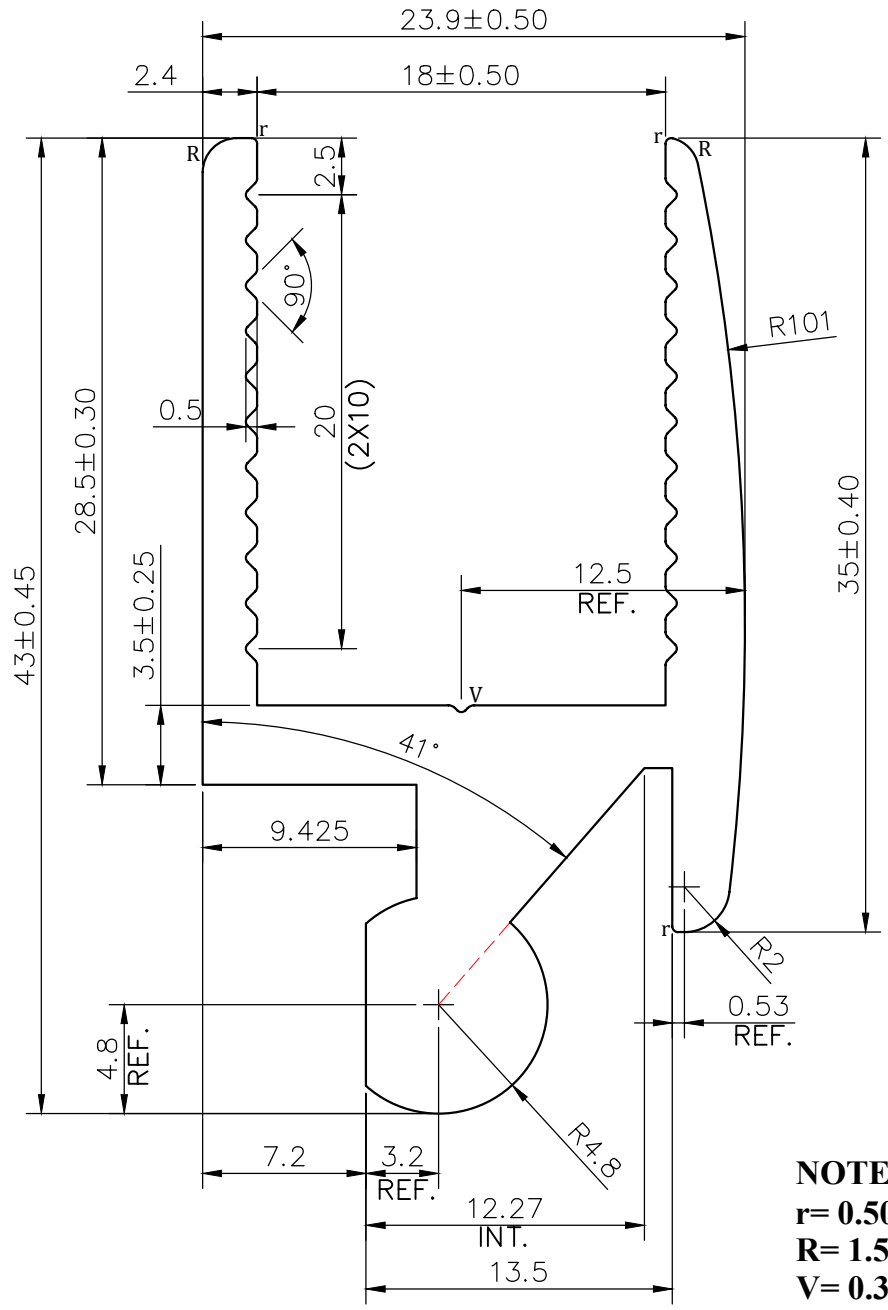

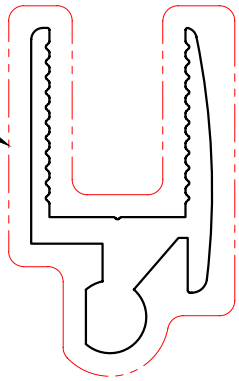

SCALE 1:1

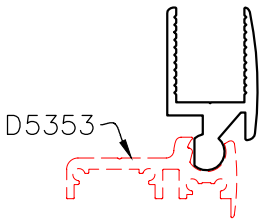

SCALE 1:2
MATCHING

NOTE:-
r= 0.50 RADIUS (3 PLACES)
R= 1.5 RADIUS (2 PLACES)
V= 0.3x90° V-GROOVE (1 PLACE)

1. STRAIGHTNESS= 1.7mm/M
2. TWIST= 1.7mm/M
3. ANGULARITY= ±2°
4. FLATNESS= 0.007xWIDTH

JINDAL
SYMBOL OF QUALITY
AN ISO 9001 COMPANY

JINDAL ALUMINIUM LTD.

BHIWADI-301019 (INDIA)

	NAME	DATE
DRAWN	ASHUTOSH	17-07-2023
CHECKED		
APPROVED		

1. ALL DIMENSIONS ARE IN mm.
2. ROUND OFF ALL SHARP CORNERS WITH 0.40 mm.
3. TOLERANCES WILL BE AS PER BS:EN-755-9 , UNLESS OTHERWISE SPECIFIED

SCALE	3:1
AREA mm^2	325.157
PERIMETER mm.	201.68
WEIGHT kg/m	0.878

PARTY'S NAME	ANTARCTICA EQUIPMENT
PARTY'S DRAWING No.	AS PER DRAWING
ALLOY & TEMPER	6060
DESCRIPTION	REFRIGERATOR SECTION

DRAWING No.	SECTION No.
MAL-12665	
D5354	D5354