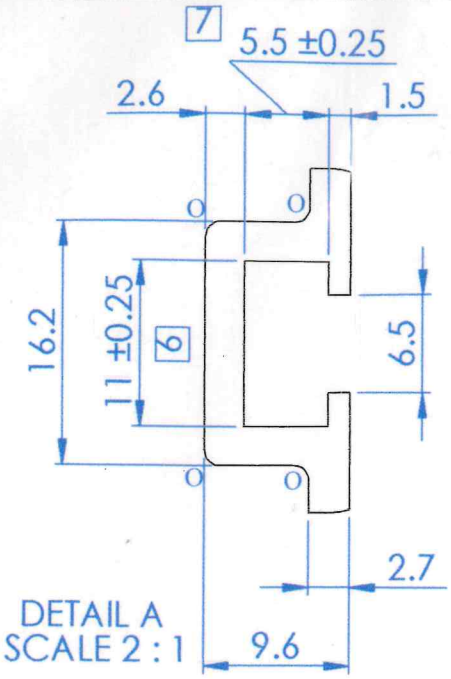

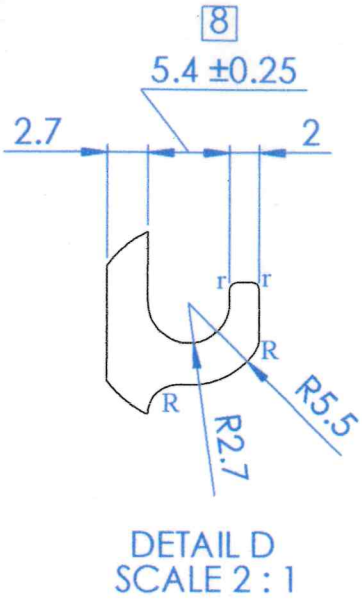

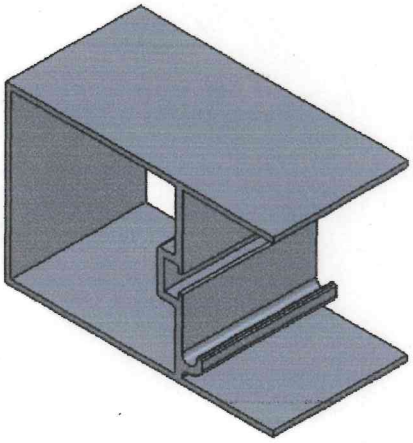

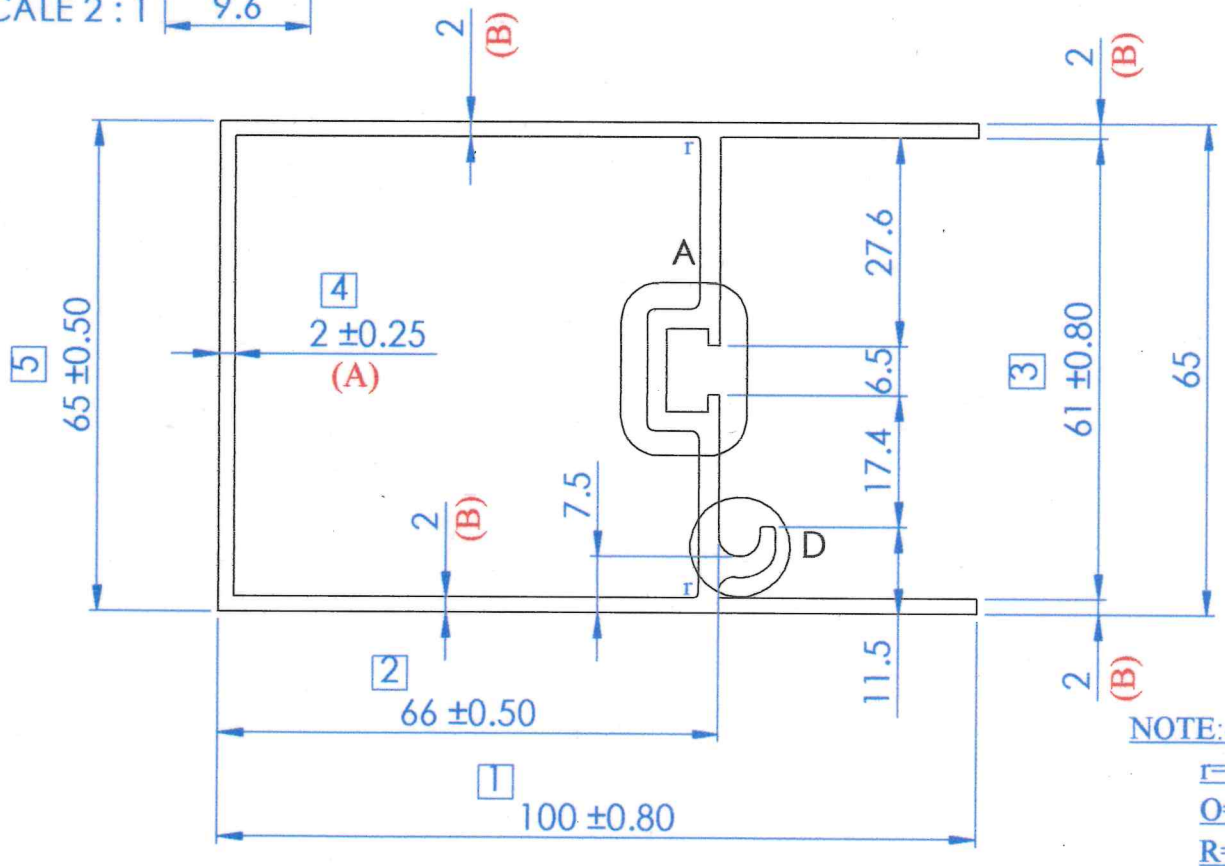

NOTE:-
r= 0.50R
O= 1.00R
R= 2.00R

TRANSOME

LOCATION:-P1 - 1HOLE
ALL DIMENSION ARE IN M.M.
UNSPECIFIED CORNER RADIUS:0.40

TOL. AS PER BS EN 755-9:2008
UNLESS SPECIFIED

TWIST= ±1/4°/300 M.M./M.
STRAIGHTNESS= 1.50 M.M./MTR.
ANGULARITY= ±1.5°

INDO ALUSYS INDUSTRIES LIMITED BHIWADI RAJASTHAN - 301019

PARTY SAMPLE & DRG.	DRG.		PARTY NAME M/S UNIBILD ASSOCIATES				REF:—AS PER DIE ORDER FORM Dt.-13.02.12		
				DRAWN	DHARMVIR	18.02.12	AREA	757.18	MM²
				CHECKED		10.5.13	WEIGHT	2.044	KG/M.
	(B)	DIM. 2.00 WAS 1.90mm.		APPROVED		10.5.13	WT. RANGE	-------	Kg/12'
	(A)	DIM. 2.00 WAS 1.60mm.		SCALE	1:1 & 2:1	DATE	ALLOY	6063-T6	
001	(REF.)	AS PER INST. OF HOD Dt.-25.04.13		CRITICAL DIM.	*		MAL NO	12779	
REV. STATUS	REV. NO.	DESCRIPTION	SIGN DATE	PERIMETER	INT.	256.25	SEC.NO.	D-5407	
REVISION					EXT.	438.48			