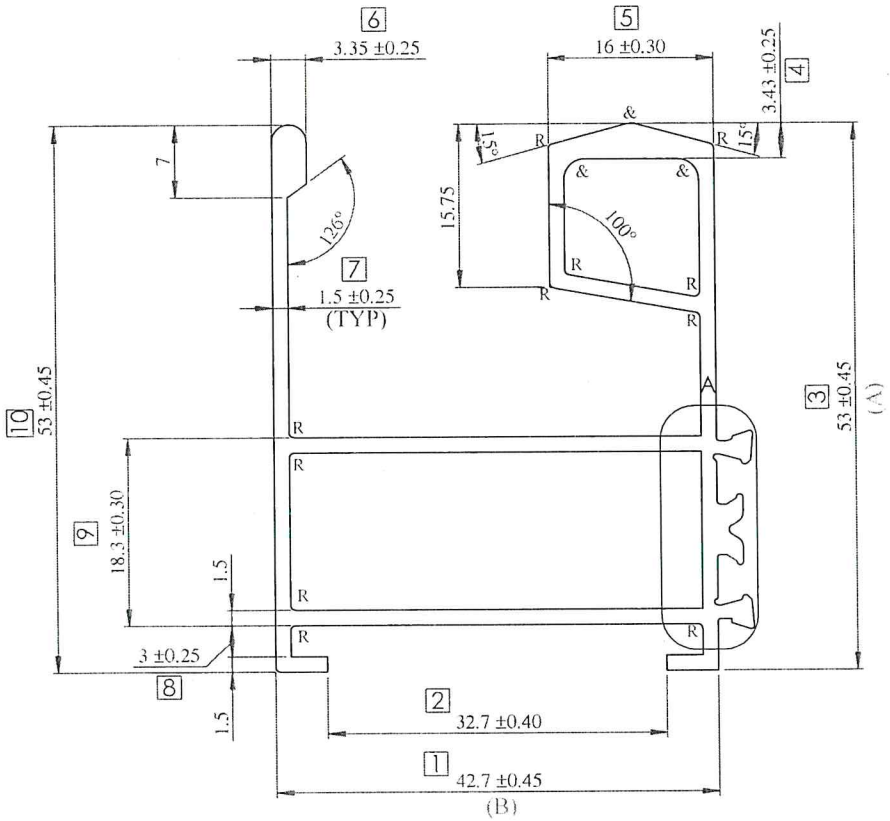

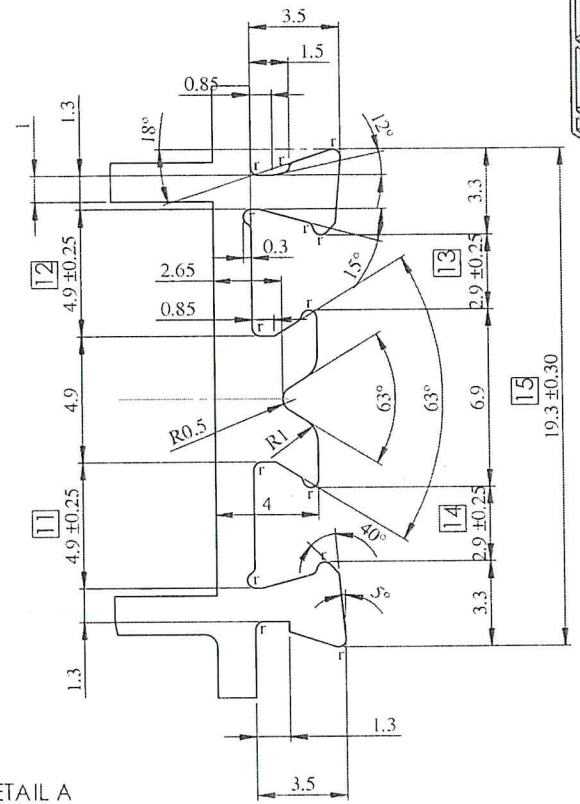

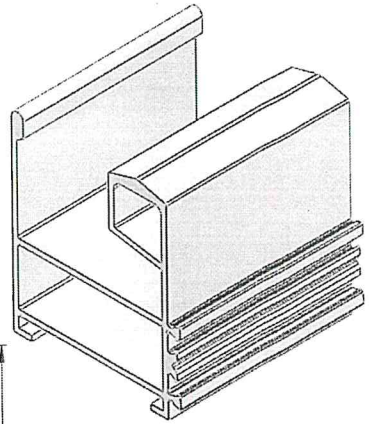

DETAIL A
SCALE 5 : 1

LOCATION:-P2 - 1HOLE
ALL DIMENSION ARE IN M.M.
UNSPECIFIED CORNER RADIUS:0.40

TOL. AS PER BS EN 755-9:2008
UNLESS SPECIFIED

TWIST=±1/4°/300 M.M./M.
STRAIGHTNESS= 1.50 M.M. MTR.
ANGULARITY=±1.5°

NOTE:
r= 0.30R
R= 0.50R
&= 2.00R

INDO ALUSYS INDUSTRIES LIMITED BHIWADI RAJASTHAN - 301019

PART SAMPLE & DEC. AGV/SEC/PROFILE/4-01				PART NAME M-S AGV ALFAB				REF:- AS PER IOM Dt.-14.05.12	
				DRAWN	DHARMVIR	04.06.12	AREA	400.00	MM²
	(B)	DIM. 42.70 WAS 40.70mm.		CHECKED			WEIGHT	1.080	KG/M.
002		AS PER EMAIL ON Dt.-08.08.12		APPROVED			WT. RANGE	--------	Kg/12
	(A)	DIM. 52.93 WAS 53.00mm.		SCALE	1:1,2:1&5:1	DATE	ALLOY	6063-T6	
001	(REF.)	AS PER EMAIL ON Dt.-24.07.12		CRITICAL DIM.	*		MAL NO	12940	
REV STATUS	REV NO	DESCRIPTION	SIGN DATE	PERIMETER	INT.	158.02	SEC.NO.	D-5590	
		REV			EXT.	324.81			