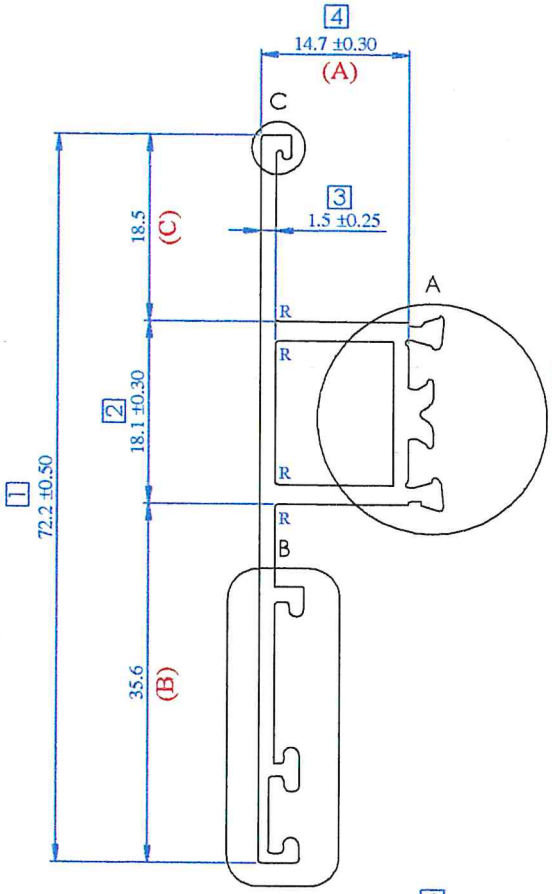

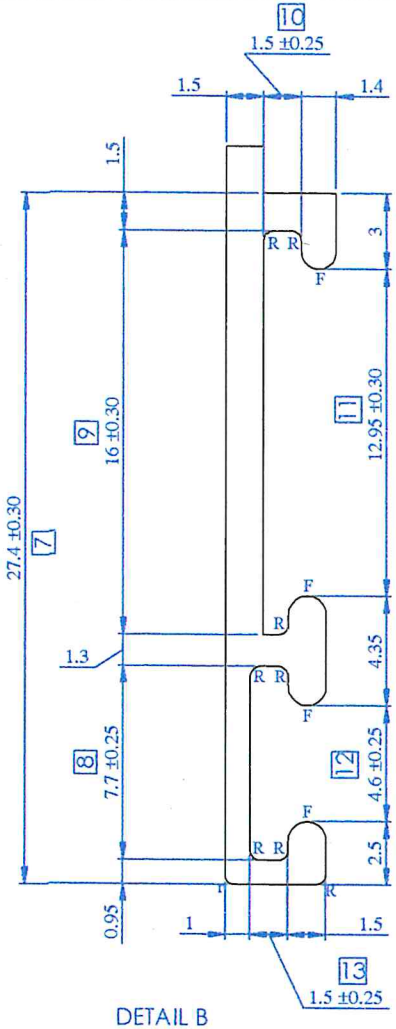

DETAIL B
SCALE 5 : 1

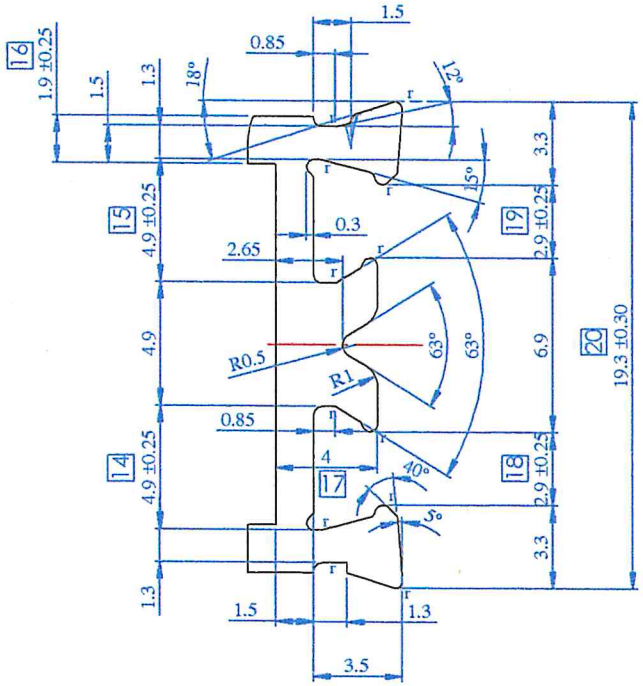

DETAIL A
SCALE 5 : 1

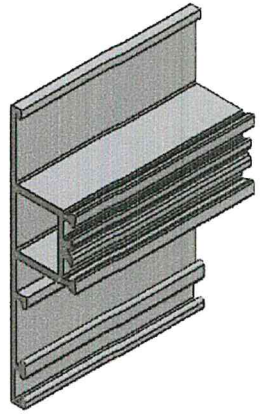

NOTE:-

r= 0.30R

R= 0.40R

F= Full Radius

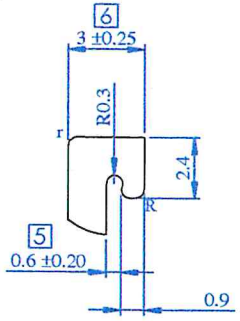

DETAIL C
SCALE 5 : 1

LOCATION:-P2 - 1HOLE
ALL DIMENSION ARE IN M.M.
UNSPECIFIED CORNER RADIUS:0.40

TOL. AS PER BS EN 755-9:2008
UNLESS SPECIFIED

TWIST=±1/4°/300 M.M./M.
STRAIGHTNESS= 1.50 M.M./MTR.
ANGULARITY=±1.5°

INDO ALUSYS INDUSTRIES LIMITED BHIWADI RAJASTHAN - 301019

PARTY SAMPLE & DRG. AGV/SEC/PROFILE/4.03			PARTY NAME M/S AGV ALFAB				REF:- AS PER IOM Dt.-14.05.12		
	(C)	DIM. 18.50 WAS 19.00mm.		DRAWN	DHARMVIR	04.06.12	AREA	224.00	MM²
	(B)	DIM. 35.60 WAS 35.10mm.		CHECKED			WEIGHT	0.605	KG/M.
002		AS PER EMAIL ON Dt.-24.07.12		APPROVED		22/10/12	WT. RANGE	-------	Kg/12
	(A)	DIM. 14.7 WAS 15.7mm.		SCALE	1:1,2:1&5:1	DATE	ALLOY	6063-T6	
001	(REF.)	AS PER EMAIL ON Dt.-09.06.12		CRITICAL DIM.	*		MAL NO	12942	
REV. STATUS	REV. NO.	DESCRIPTION	SIGN DATE	PERIMETER	INT.	51.66	SEC.NO.	D-5592	
REVISION					EXT.	229.62			