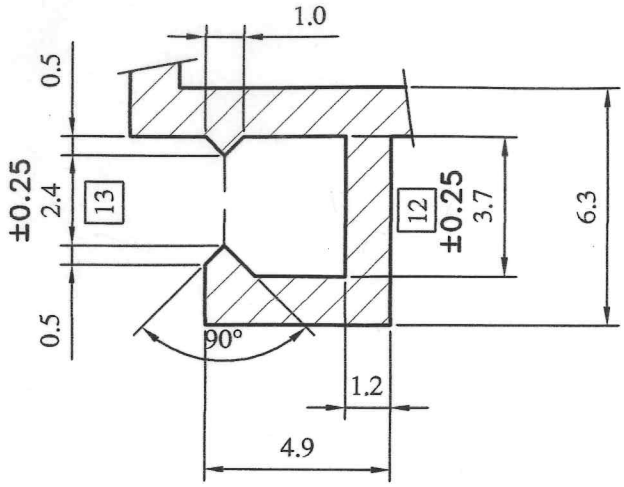

DETAIL AT- A

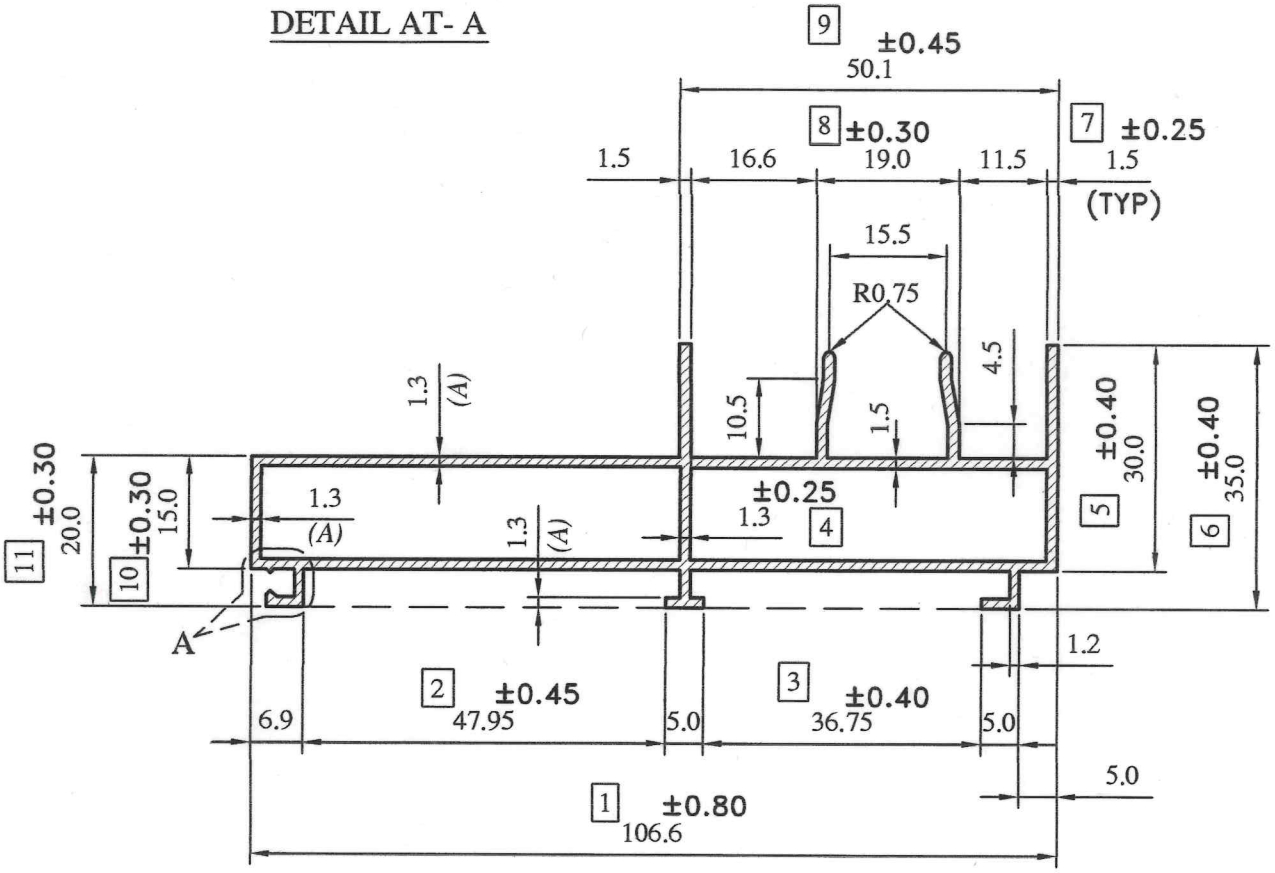

LOCATION:-P1 - 1HOLE
ALL DIMENSION ARE IN M.M.
UNSPECIFIED CORNER RADIUS:0.40

TOL. AS PER BS EN 755-9:2008
UNLESS SPECIFIED

TWIST =±1/4°/300 M.M./M.
STRAIGHTNESS = 1.50 M.M./MTR.
ANGULARITY =±1.5°

INDO ALUSYS INDUSTRIES LIMITED BHIWADI RAJASTHAN - 301019

PARTY SAMPLE & DRG.		SD8F		PARTY NAME	M/S AAP DIVISION		REF:-AS PER EMAIL ON Dt.-28.07.12		
				DRAWN	DHARMVIR	06.08.12	AREA	458.00	MM²
				CHECKED		21.9.12	WEIGHT	1.237	KG/M.
				APPROVED		21.9.12	WT. RANGE	-------	Kg/12'
	(A)	DIM. 1.30 WAS 1.20mm.		SCALE	1:1 & 5:1	DATE	ALLOY	6063-T6	
001	(REF.)	AS PER EMAIL ON Dt.-31.08.12		CRITICAL DIM.	*		MAL NO	13177	
REV. STATUS	REV. NO.	DESCRIPTION	SIGN DATE	PERIMETER	INT.	254.20	SEC.NO.	D-5642	
REVISION					EXT.	411.90			