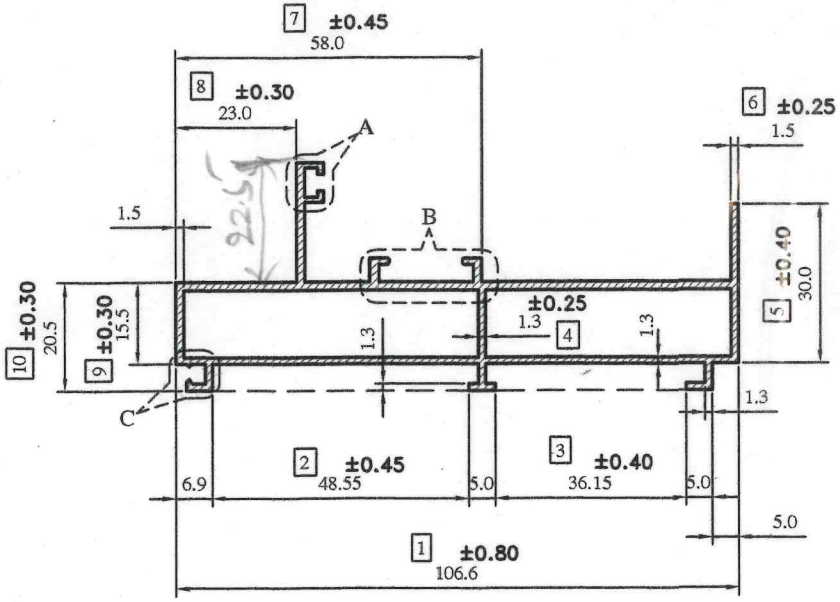

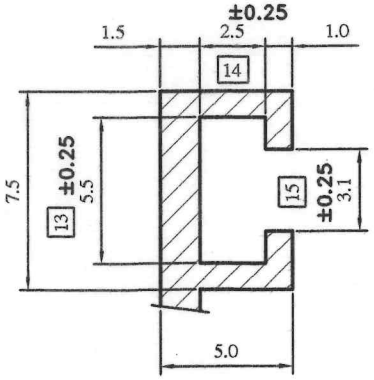

DETAIL AT- A

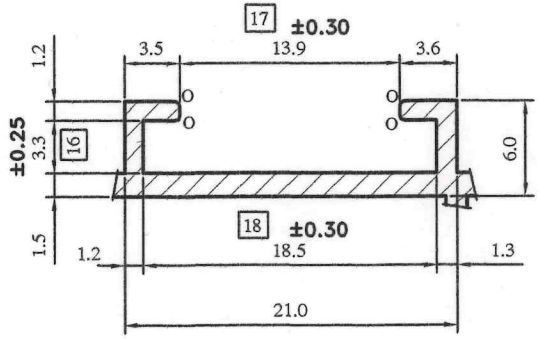

DETAIL AT- B

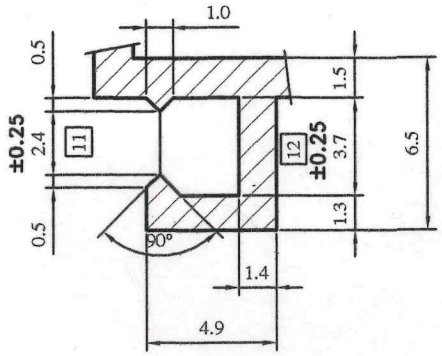

DETAIL AT- C

NOTE:-
O= 0.30R

LOCATION:-P1 - 1HOLE
ALL DIMENSION ARE IN M.M.
UNSPECIFIED CORNER RADIUS:0.40

TOL. AS PER BS EN 755-9:2008
UNLESS SPECIFIED

TWIST =±1/4°/300 M.M./M.
STRAIGHTNESS = 1.50 M.M./MTR.
ANGULARITY =±1.5°

INDO ALUSYS INDUSTRIES LIMITED BHIWADI RAJASTHAN - 301019

PARTY SAMPLE & DRG.	SD7F		PARTY NAME	M/S AAP DIVISION			REF:- AS PER EMAIL ON Dt.-28.07.12		
				DRAWN	DHARMVIR	22.08.12	AREA	472.00	MM²
				CHECKED		27/08/12	WEIGHT	1.274	KG/M.
				APPROVED			WT. RANGE	-------	Kg/12'
				SCALE	1:1,3;1&5:1	DATE	ALLOY	6063-T6	
00	(REF.)			CRITICAL DIM.	*		MAL NO	13179	
REV. STATUS	REV. NO.	DESCRIPTION	SIGN DATE	PERIMETER	INT.	255.40	SEC.NO.	D-5644	
		REVISIO			EXT.	415.54			