MAL NO–13674
D5877

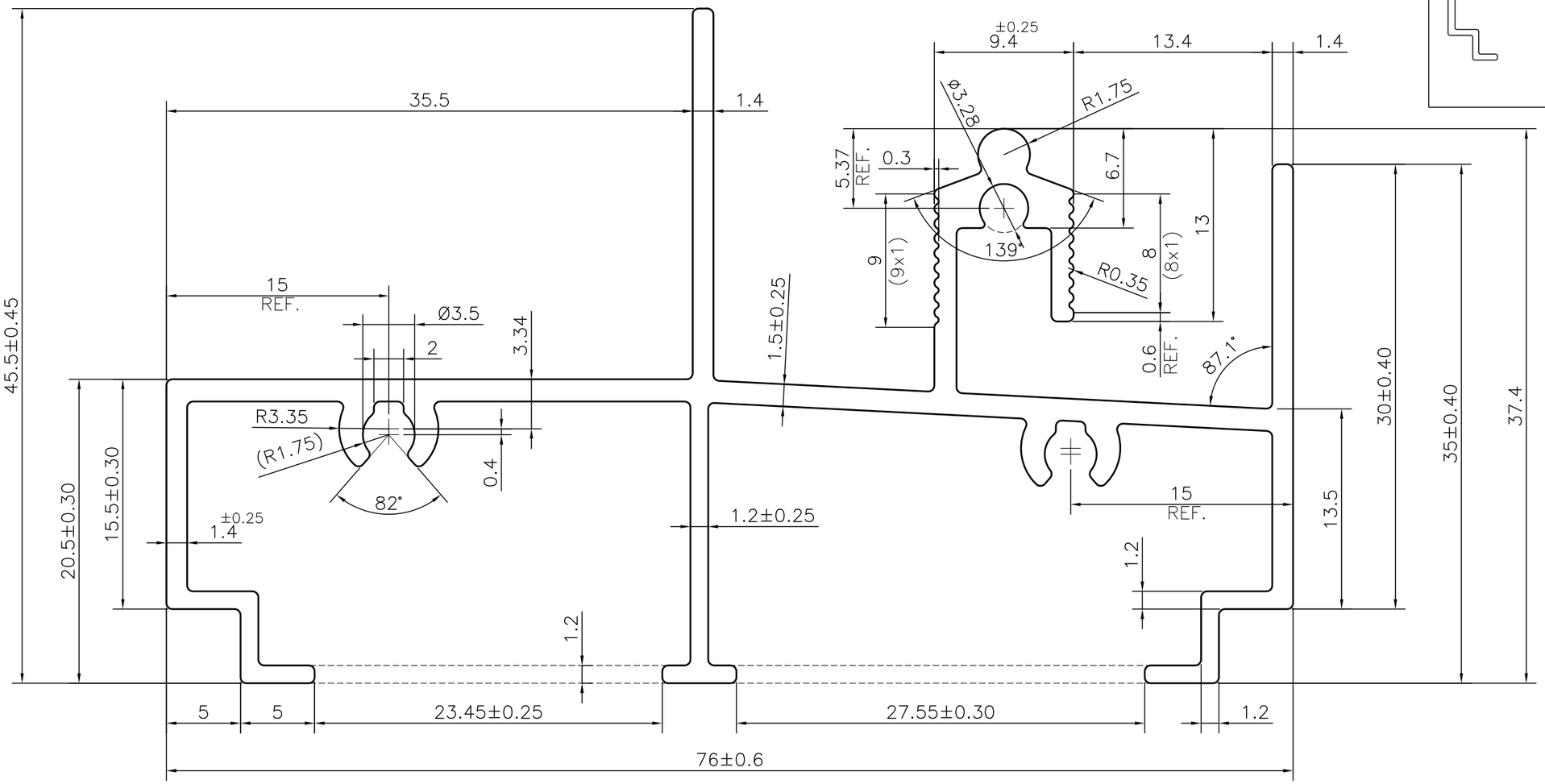

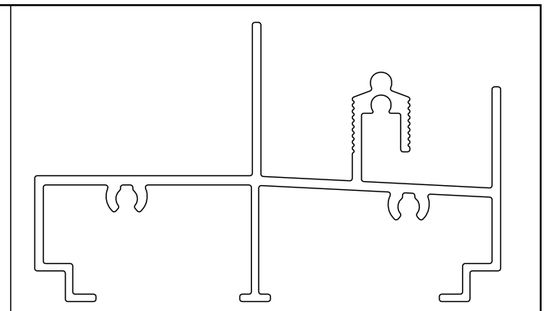

SCALE 1:1

JINDAL SYMBOL OF QUALITY AN ISO 9001 COMPANY	JINDAL ALUMINIUM LTD. BHIWADI–301019 (INDIA)			
1. ALL DIMENSIONS ARE IN mm. 2. ROUND OFF ALL SHARP CORNERS WITH 0.40 mm. 3. TOLERANCES WILL BE AS PER BS:EN–755–9 , UNLESS OTHERWISE SPECIFIED				
PARTY'S NAME	JP ASSOCIATES LTD.			
PARTY'S DRAWING No.	AS PER DRAWING			
ALLOY & TEMPER	6063 T6	PRODUCT CODE:–048 HSN CODE:– 76042990		
DESCRIPTION	WINDOW SECTION			

	NAME	DATE
DRAWN	ASHUTOSH	22–09–2023
CHECKED		
APPROVED		
SCALE		3:1
AREA mm^2		353.163
PERIMETER mm.		483.146
WEIGHT kg/m		0.954
DRAWING No.	SECTION No.	
MAL NO–13674	–	
D5877	D5877	