NOTE:-

r= 0.25R

O= 0.50R

R= 2.00R

&= 4.50R

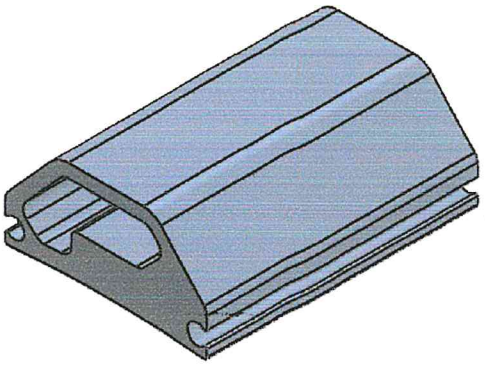

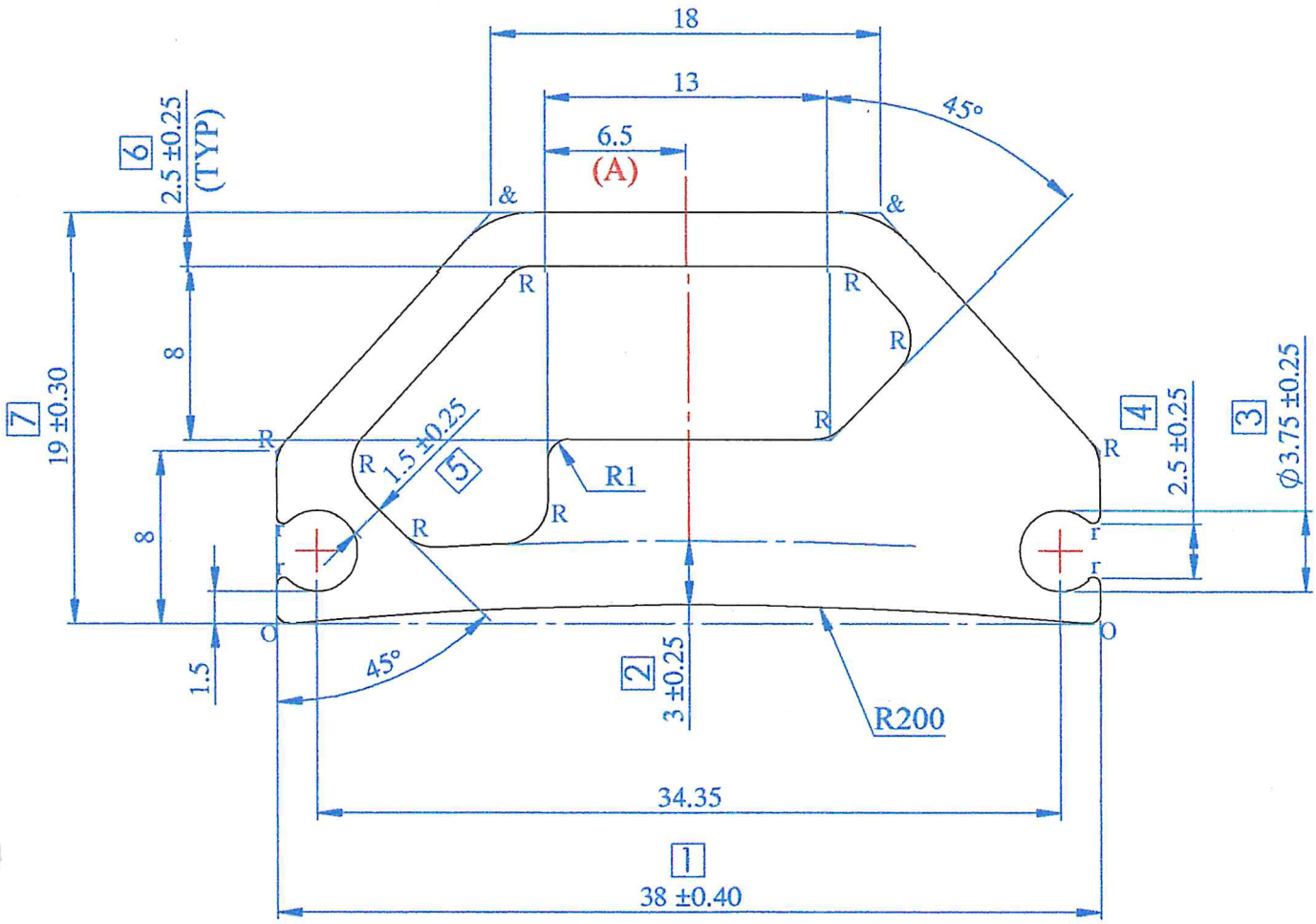

PLEASE SPECIFY THE EXPOSED SURFACE

LOCATION:-P1 - 1HOLE
ALL DIMENSION ARE IN mm.
UNSPECIFIED CORNER RADIUS:0.40

TOL. AS PER BS EN 755-9:2008
UNLESS SPECIFIED

TWIST=±1/4°/300 M.M./M.
FLATNESS= WIDTH X 0.005mm.
STRAIGHTNESS= 1.50 M.M./MTR.
ANGULARITY=±1.5°

INDO ALUSYS INDUSTRIES LIMITED BHIWADI RAJASTHAN - 301019

PARTY SAMPLE & DRG.	SKETCH		PARTY NAME	M/S SUTRAN CONVEYORS PVT. LTD.		REF:-AS PER EMAIL ON Dt.-15.10.13			
				DRAWN	DHARMVIR	16.10.13	AREA	364.20	MM²
				CHECKED	Suraj	21.12.13	WEIGHT	0.983	KG/M.
				APPROVED			WT. RANGE	-------	Kg/12'
	(A)	DIM. 6.50 WAS 5.00mm.		SCALE	1:1 & 3:1	DATE	ALLOY	6063-T6	
001	(REF.)	AS PER EMAIL ON Dt.-23.10.13		CRITICAL DIM.	*		MAL NO	13954	
REV. STATUS	REV. NO.	DESCRIPTION	SIGN DATE	PERIMETER	INT.	65.33	SEC.NO.	D-6007	
A4		REVISION			EXT.	114.98			