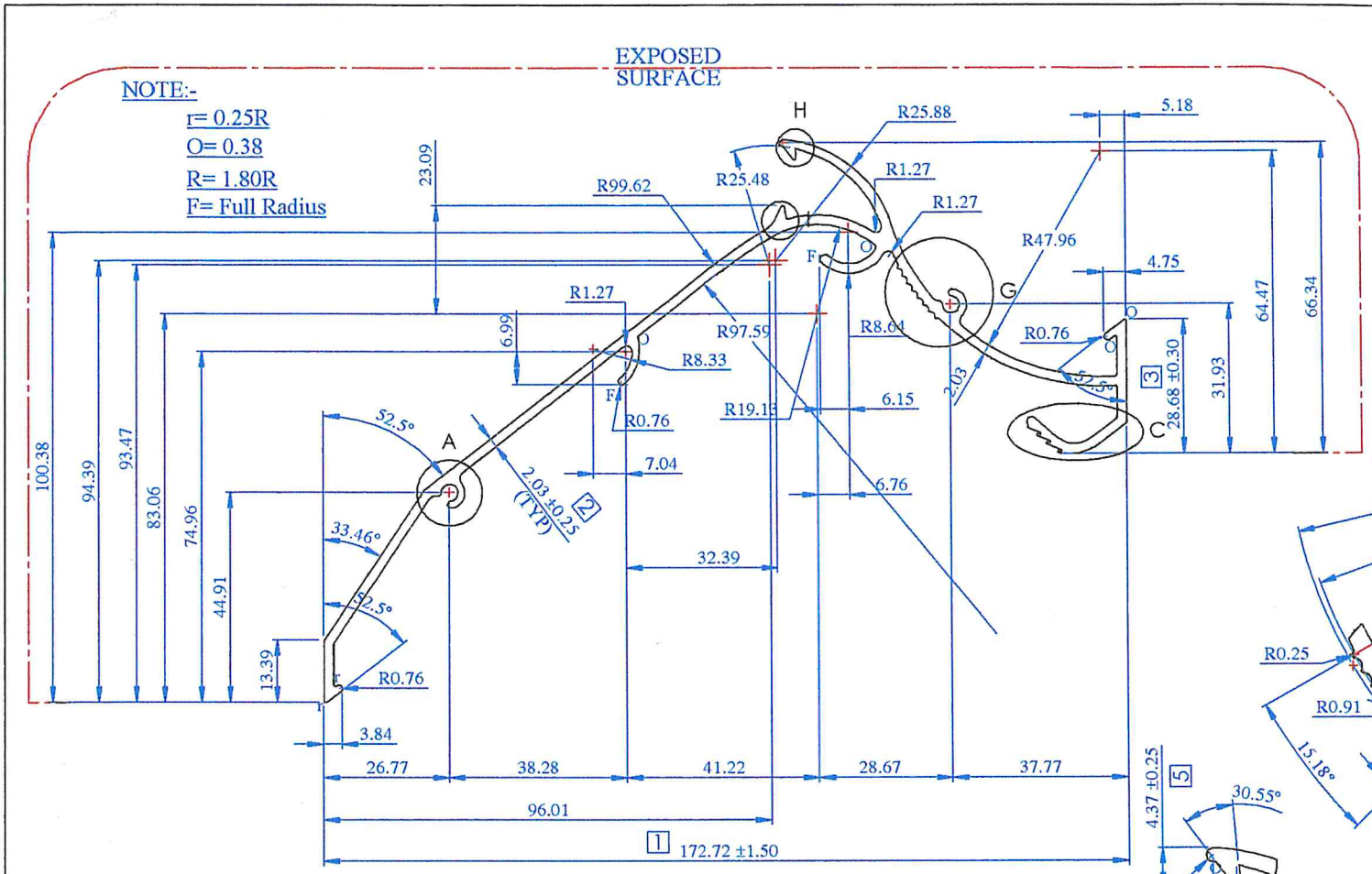

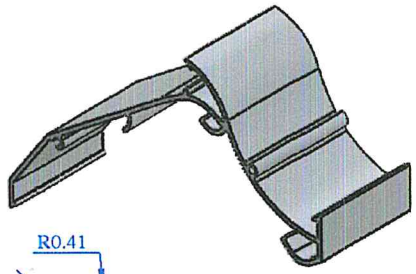

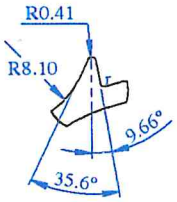

DETAIL I
SCALE 2 : 1

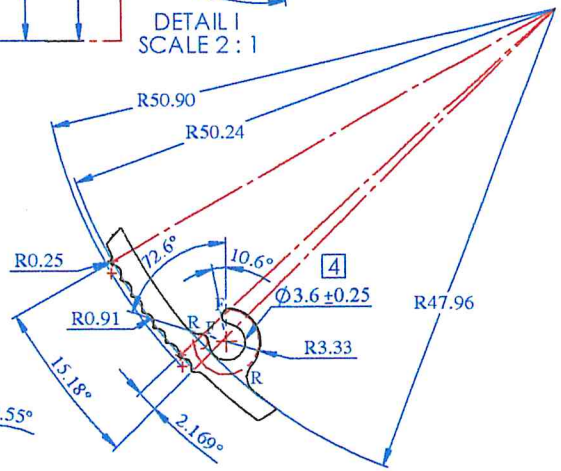

DETAIL H
SCALE 2 : 1

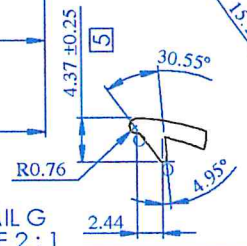

DETAIL G
SCALE 2 : 1

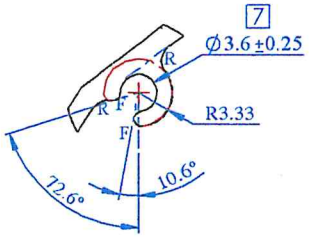

DETAIL A
SCALE 2 : 1

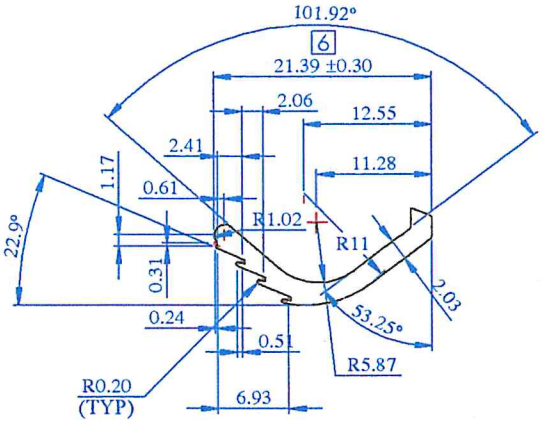

DETAIL C
SCALE 2 : 1

LOCATION:-P4 - 1HOLE
ALL DIMENSION ARE IN mm.
UNSPECIFIED CORNER RADIUS:0.40

PLEASE SPECIFY THE EXPOSED SURFACE

TOL. AS PER BS EN 755-9:2008
UNLESS SPECIFIED

TWIST=±1/4°/300 M.M./M.
FLATNESS= WIDTH X 0.005mm.
STRAIGHTNESS= 1.50 M.M./MTR.
ANGULARITY=±1.5°

INDO ALUSYS INDUSTRIES LIMITED BHIWADI RAJASTHAN - 301019

PARTY SAMPLE & DRG. 70-022501			PARTY NAME M/S RUSKIN TITUS (I) PVT. LTD.				REF:- AS PER EMAIL ON Dt.-21.02.13		
				DRAWN	DHARMVIR	13.03.14	AREA	731.37	MM²
				CHECKED	SBD	17.6.14	WEIGHT	1.975	KG/M.
				APPROVED	SBD	17.6.14	WT. RANGE	-------	Kg/12
				SCALE	1:1 & 2:1	DATE	ALLOY	6063-T6	
00	(REF.)			CRITICAL DIM.	*		MAL NO	14133	
REV. STATUS	REV. NO.	DESCRIPTION	SIGN DATE	PERIMETER	INT.		SEC.NO.	D-6117	
A3		REVISION			EXT.	719.92			