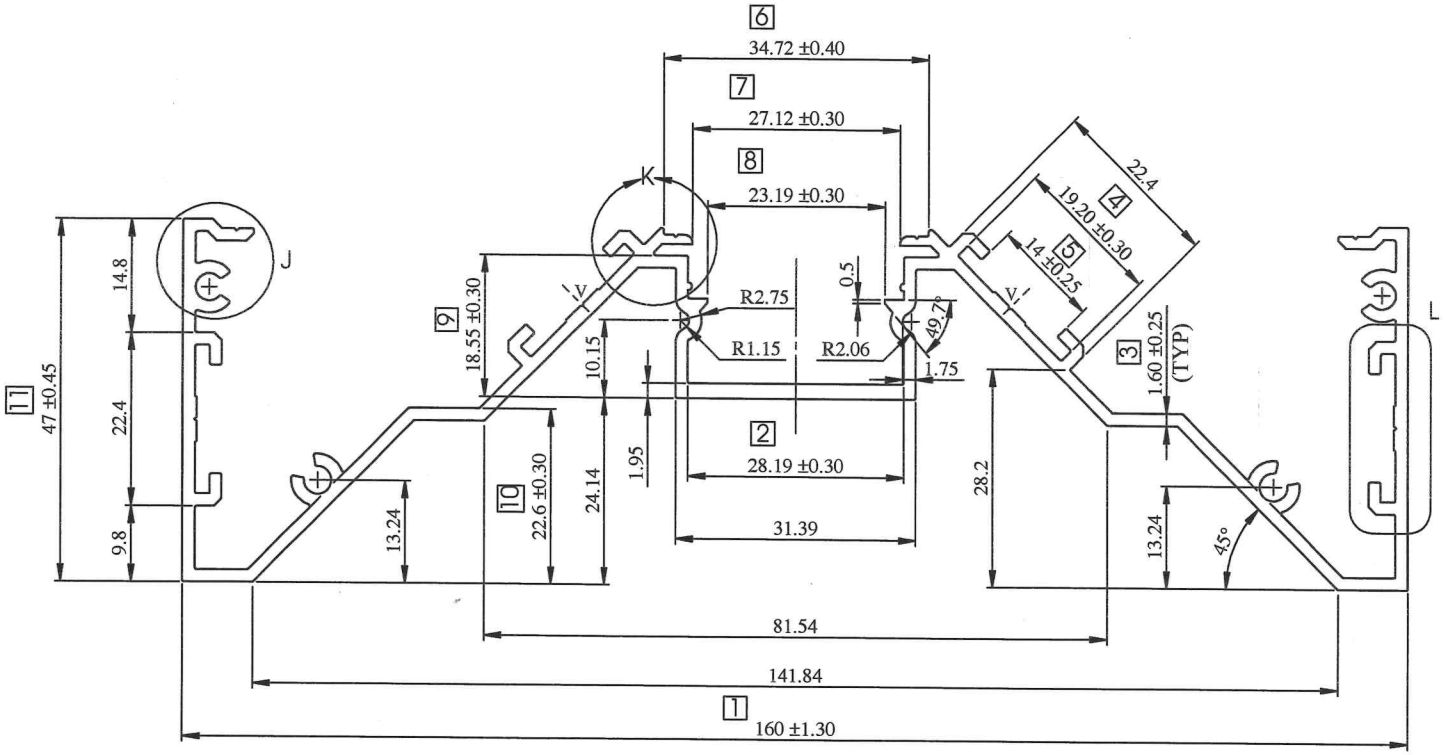

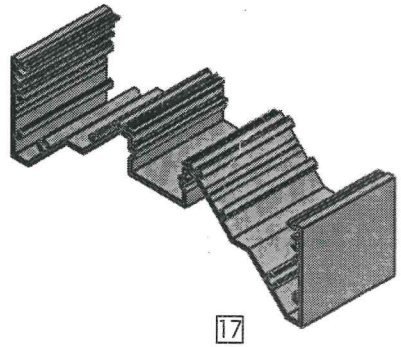

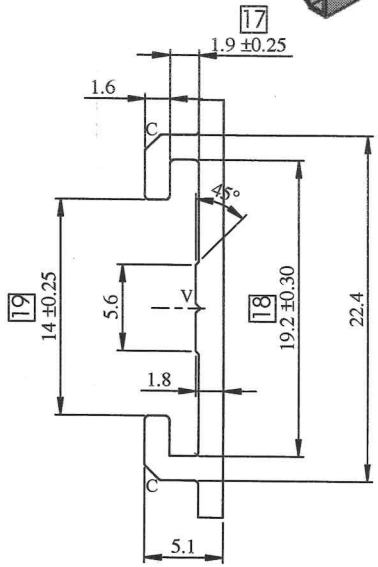

DETAIL L
SCALE 3 : 1

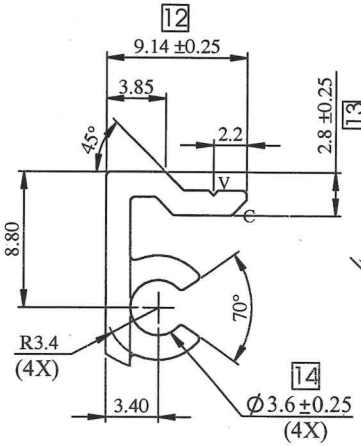

DETAIL J
SCALE 3 : 1

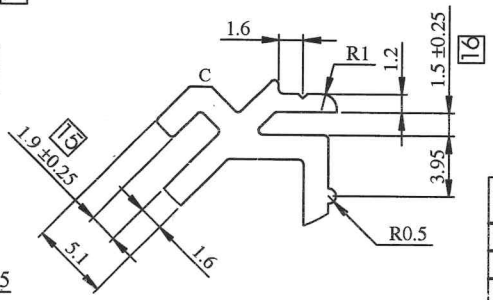

DETAIL K
SCALE 3 : 1

NOTE:-

C= 1.00X45° (CHAMFER)
V= 0.30X90°
UNMARKED RADIUS 0.30mm.

LOCATION:-P4 - 1HOLE
ALL DIMENSION ARE IN mm.
UNSPECIFIED CORNER RADIUS:0.40

PLEASE SPECIFY THE EXPOSED SURFACE

TOL. AS PER BS EN 755-9:2008
UNLESS SPECIFIED

TWIST=±1/4°/300 M.M./M.
FLATNESS= WIDTH X 0.005mm.
STRAIGHTNESS= 1.50 M.M./MTR.
ANGULARITY=±1.5°

INDO ALUSYS INDUSTRIES LIMITED BHIWADI RAJASTHAN - 301019

PARTY SAMPLE & DRG.	RD21300377-0	PARTY NAME	M/S REGENT LIGHTING				REF:– AS PER EMAIL ON Dt.-03.09.14		
				DRAWN	DHARMVIR	09.09.14	AREA	712.25	MM²
				CHECKED		6.11.14	WEIGHT	1.923	KG/M.
				APPROVED		6.11.14	WT. RANGE	-------	Kg/12'
		SHAPE MODIFIED		SCALE	1.5:1 & 3:1	DATE	ALLOY	6063-T6	
001	(REF.)	AS PER EMAIL ON Dt.-11.10.14		CRITICAL DIM.	*		MAL NO	14457	
REV. STATUS	REV. NO.	DESCRIPTION	SIGN DATE	PERIMETER	INT.		SEC.NO.	D-6241	
A3		REVISION			EXT.	859.49			