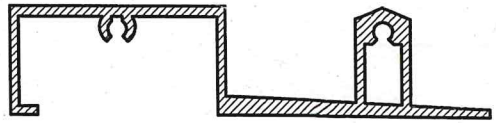

ACTUAL SIZE

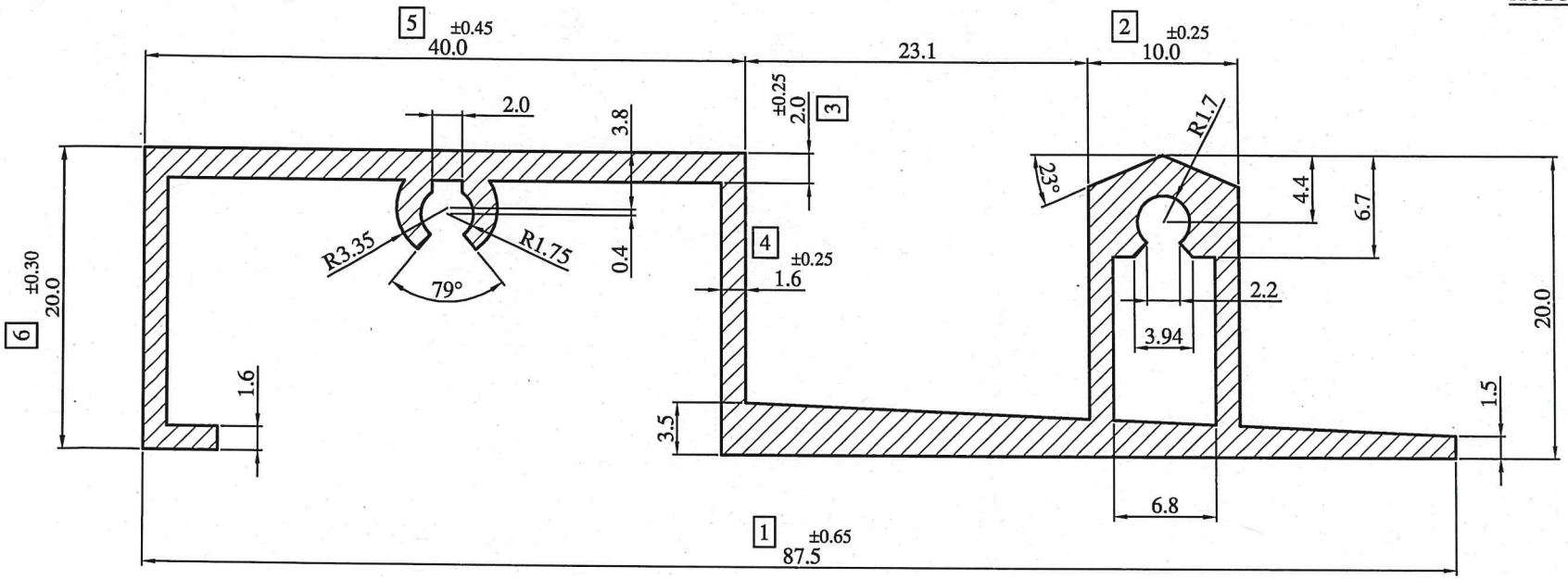

PLEASE SPECIFY THE EXPOSED SURFACE

LOCATION:-P2 - 1HOLE
ALL DIMENSION ARE IN M.M.
UNSPECIFIED CORNER RADIUS:0.40

TOL. AS PER BS EN 755-9:2008
UNLESS SPECIFIED

TWIST =±1/4°/300 mm./mtr.
FLATNESS =WIDTH X 0.005mm.
STRAIGHTNESS = 1.50 mm./mtr.
ANGULARITY =±1.5°

JINDAL ALUMINIUM LTD. BHIWADI - 301019

PARTY SAMPLE & DRG.	SD1b*	PARTY NAME	M/S J.P ASSOCIASTES				REF:-AS PER EMAIL ON Dt.-05.05.15		
				DRAWN	DHARMVIR	06.05.15	AREA	355.97	MM²
				CHECKED		3-6-15	WEIGHT	0.961	KG/M.
				APPROVED		3-6-15	WT. RANGE	-------	Kg/12'
				SCALE	1:1 & 3:1	DATE	ALLOY	6063-T6	
00	(REF.)			CRITICAL DIM.	*		MAL NO	14885	
REV. STATUS	REV. NO.	DESCRIPTION	SIGN DATE	PERIMETER	INT.	42.73	SEC.NO.	D-6391	
A3					EXT.	304.93			