MAL NO.–14793
D6417

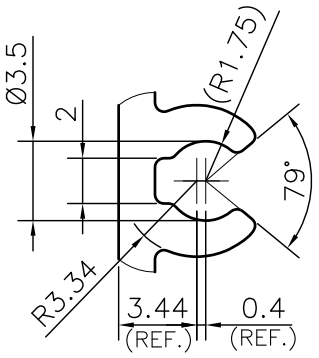

DETAIL A
SCALE 3:1

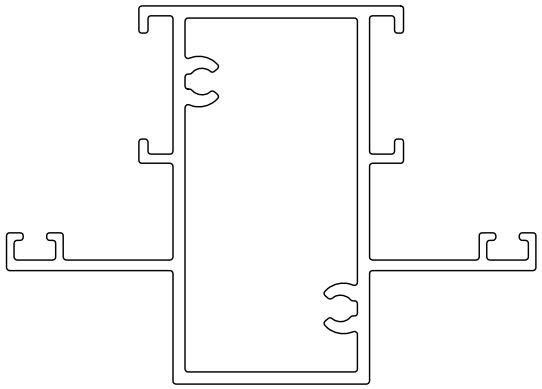

SCALE 1:1

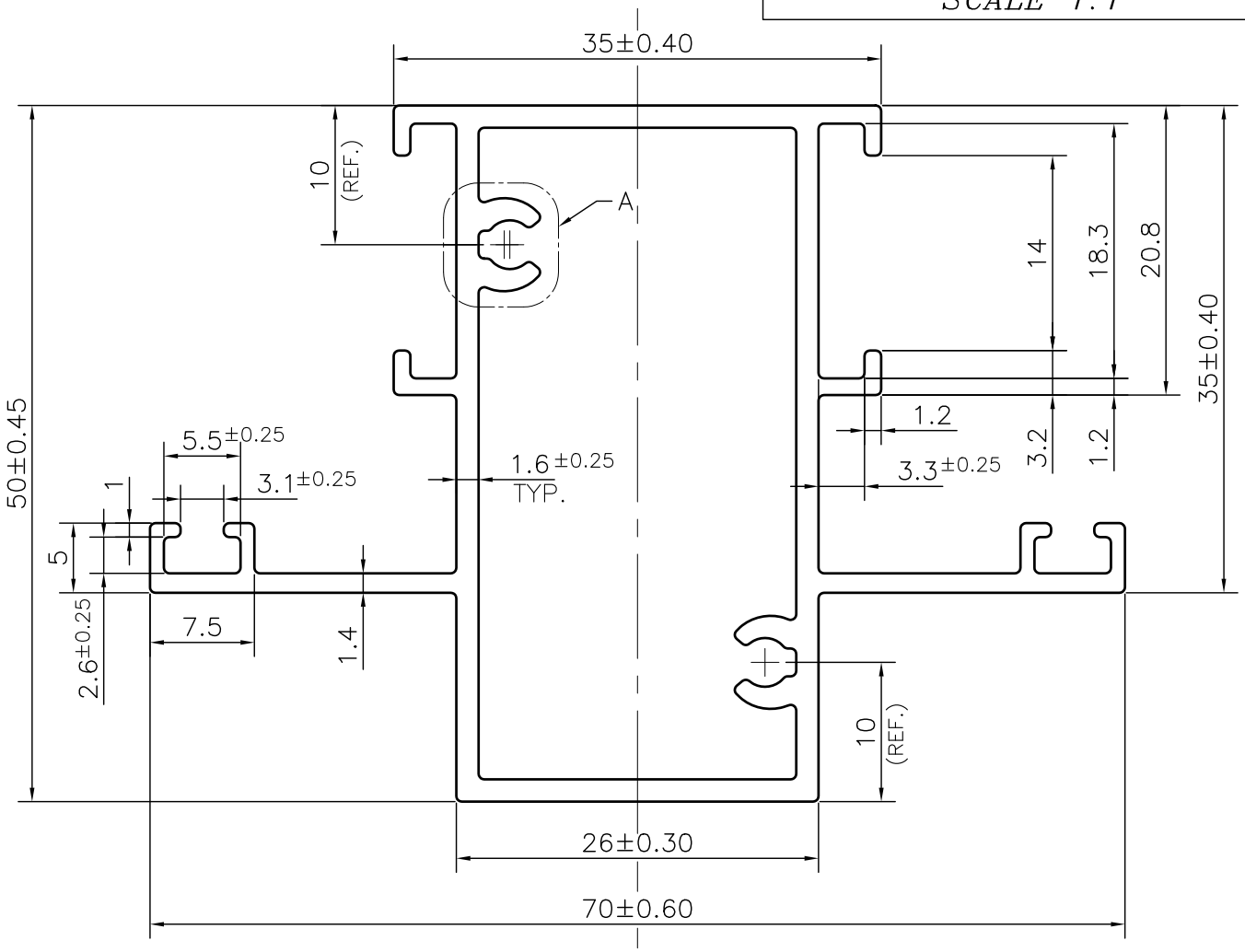

1. STRAIGHTNESS= 1.7mm/M
2. TWIST= 1.7mm/M
3. ANGULARITY= ±2°
4. FLATNESS= 0.007xWIDTH

SYMBOL OF QUALITY
AN ISO 9001 COMPANY

JINDAL ALUMINIUM LTD.

BHIWADI–301019 (INDIA)

	NAME	DATE
DRAWN	ASHUTOSH	30–04–2024
CHECKED		
APPROVED		

1. ALL DIMENSIONS ARE IN mm.
2. ROUND OFF ALL SHARP CORNERS WITH 0.40 mm.
3. TOLERANCES WILL BE AS PER BS:EN–755–9 , UNLESS OTHERWISE SPECIFIED

SCALE	2:1
AREA mm^2	375.631
PERIMETER mm.	322.673
WEIGHT kg/m	1.014

PARTY'S NAME	AAP DIVISION
PARTY'S DRAWING No.	AS PER DRAWING
ALLOY & TEMPER	6063 T6 — PRODUCT CODE:–048 — HSN CODE:– 76042100
DESCRIPTION	WINDOW SECTION

DRAWING No.	SECTION No.
MAL NO.–14793	–
D6417	D6417