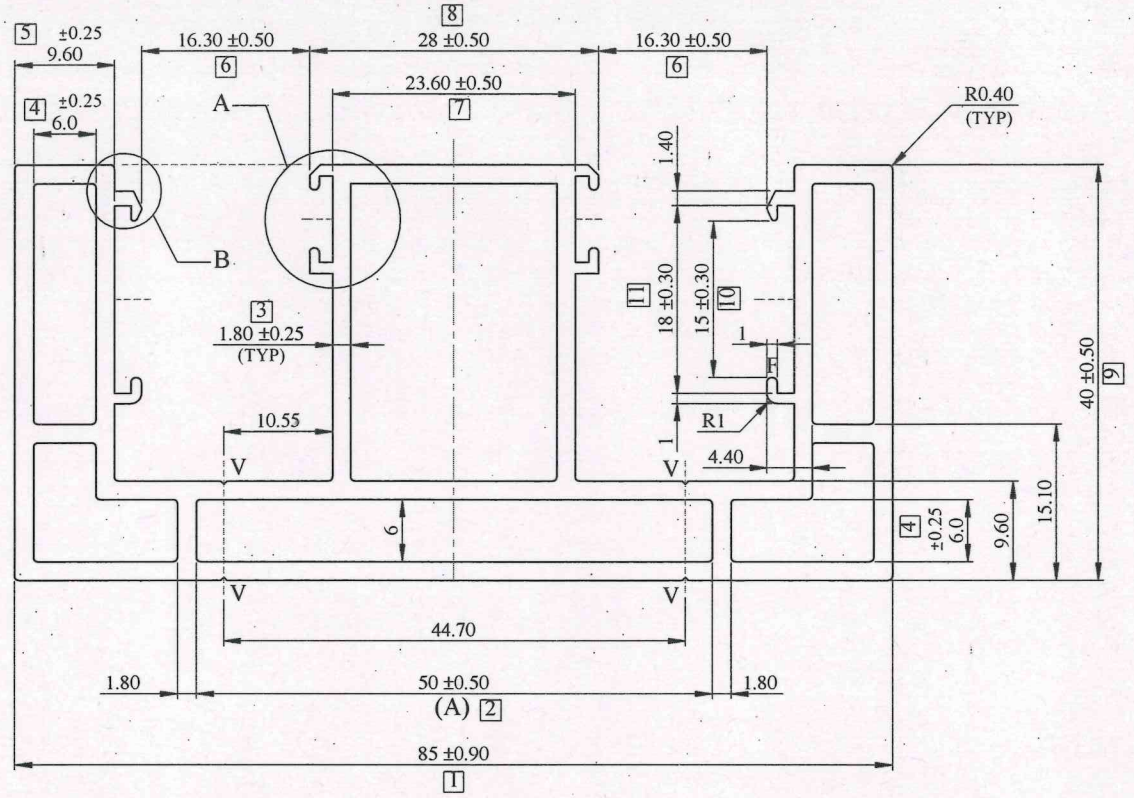


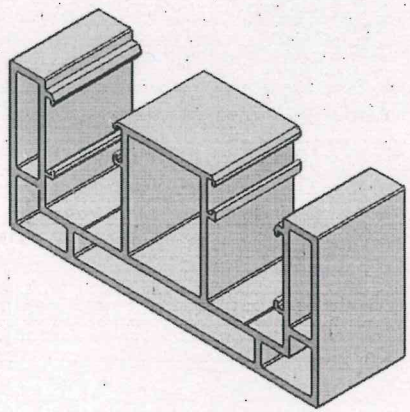

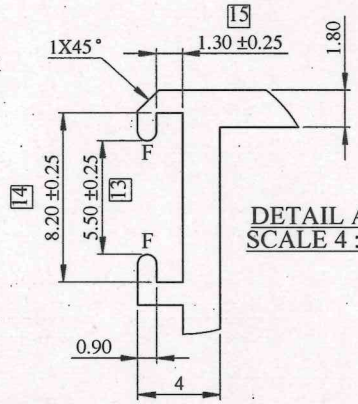


DETAIL A
SCALE 4 : 1

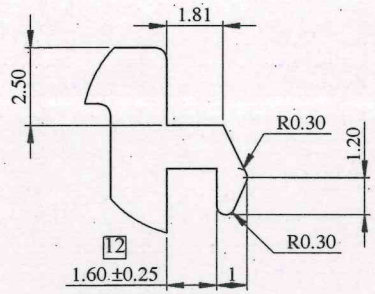


DETAIL B
SCALE 6 : 1

NOTE:-
F = FULL RADIUS
V-Groove = 0.3X90°

LOCATION:-P1-1HOLE
ALL DIMENSION ARE IN mm.
UNSPECIFIED CORNER RADIUS:0.40

PLEASE SPECIFY THE EXPOSED SURFACE
TOL. AS PER BS EN 755-9:2008
UNLESS SPECIFIED

TWIST = ±1/4°/300 M.M.
FLATNESS = WIDTH X 0.005mm.
STRAIGHTNESS = 1.50 M.M./MTR.
ANGULARITY = ±1.5°

## INDO ALUSYS INDUSTRIES LIMITED BHIWADI RAJASTHAN - 301019

| | | | | | | | | | |
|---|---|---|---|---|---|---|---|---|---|
| PARTY SAMPLE & DRG. | SKETCH | | PARTY NAME | M/S H.V. ART N GLASS | | | REF:– AS PER DISC WITH PARTY DT.- 29.03.17 | | |
| | | | | DRAWN | VIVEK YADAV | 29.03.17 | AREA | 764.56 | MM² |
| | | | | CHECKED | | | WEIGHT | 2.064 | KG/M. |
| 001 | (A) | DIM. 50.0 WAS 40.0 | | APPROVED | | 01/5/17 | WT. RANGE | ------- | Kg/12 |
| | | V-GRoove ADDED | | SCALE | 2:1,4:1 & 6:1 | DATE | ALLOY | 6063-T6 | |
| | (REF.) | AS PER EMAIL DT.- 03.04.17 | | CRITICAL DIM. | * | | MAL NO | 16278 | |
| REV. STATUS | REV. NO. | DESCRIPTION | SIGN DATE | PERIMETER | INT. | 422.74 | SEC.NO. | D-6926 | |
| A3 | | REV | | | EXT. | 425.28 | | | |