MAL NO-15896
D6958

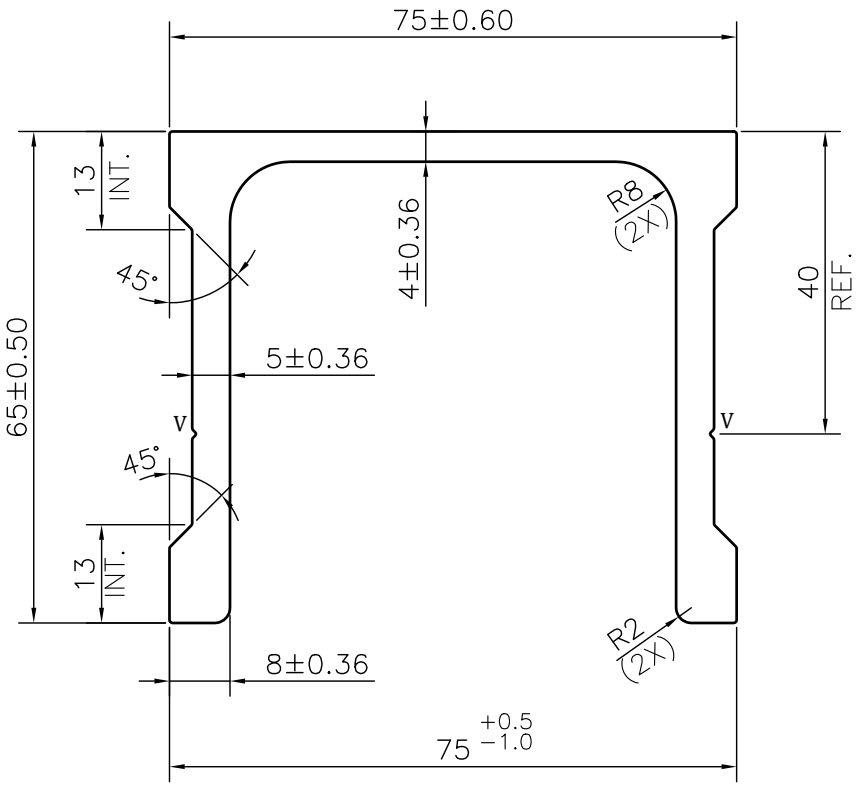

NOTE:-
V= 0.5x90° V-GOOVE (2 PLACES)

JINDAL SYMBOL OF QUALITY AN ISO 9001 COMPANY	*JINDAL ALUMINIUM LTD.* *BHIWADI-301019 (INDIA)*		NAME	DATE
		DRAWN	ASHUTOSH	16-09-2023
		CHECKED		
		APPROVED		
1. ALL DIMENSIONS ARE IN mm. 2. ROUND OFF ALL SHARP CORNERS WITH 0.40 mm. 3. TOLERANCES WILL BE AS PER IS:3965-1981 , UNLESS OTHERWISE SPECIFIED		SCALE		1:1
		AREA mm^2		1048.86
		PERIMETER mm.		398.27
		WEIGHT kg/m		2.832
PARTY'S NAME	MAINI SCAFFOLDING	DRAWING No.		SECTION No.
PARTY'S DRAWING No.	AS PER DRAWING	MAL NO-15896		–
ALLOY & TEMPER	6061 T6 — PRODUCT CODE:-029 HSN CODE:- 76042990	D6958		D6958
DESCRIPTION	STRUCTURAL MISC. SECTION			