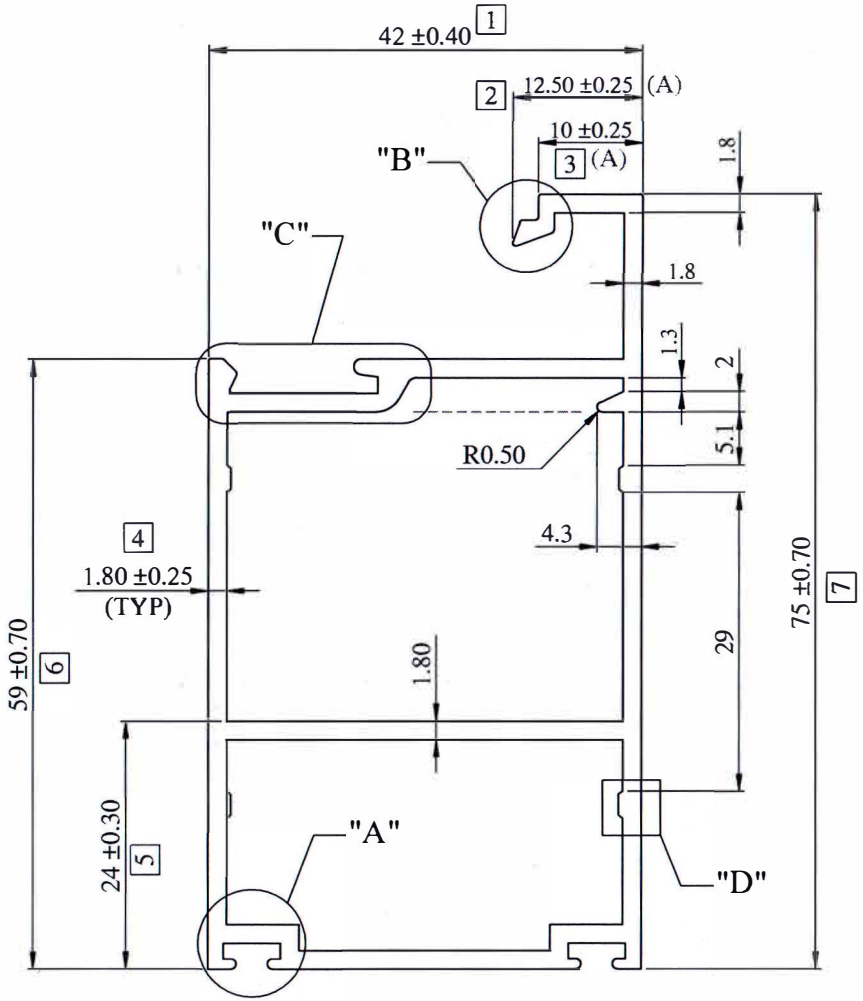

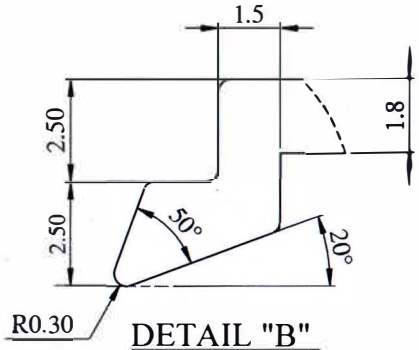

DETAIL "B"
SCALE 8 : 1

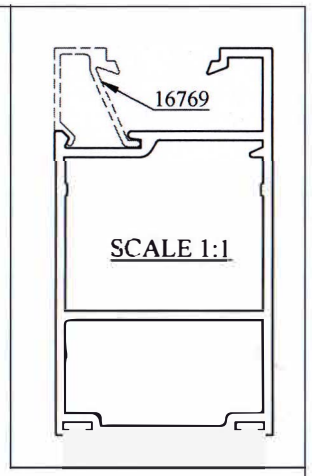

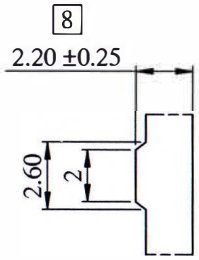

DETAIL "D"
SCALE 5 : 1

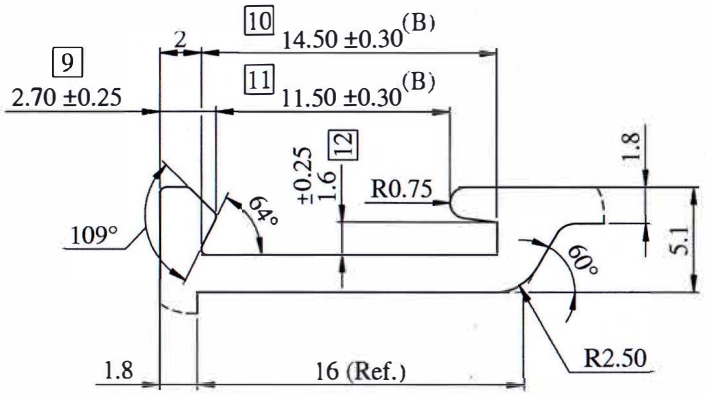

DETAIL "C"
SCALE 4 : 1

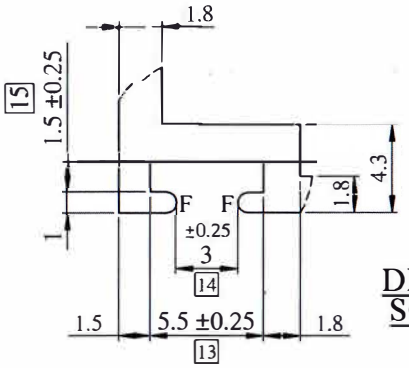

DETAIL "A"
SCALE 4 : 1

NOTE:-

F = Full Radius

Unmarked Radius is 0.30R

LOCATION:-P1-1HOLE
ALL DIMENSION ARE IN mm.
UNSPECIFIED CORNER RADIUS:0.40

PLEASE SPECIFY THE EXPOSED SURFACE

TOL. AS PER BS EN 755-9:2008
UNLESS SPECIFIED

TWIST = ±1/4° 300 M.M.
FLATNESS = WIDTH X 0.005mm.
STRAIGHTNESS = 1.50 M.M. MTR.
ANGULARITY = ±1.5°

jINDAL ALUMINIUM LIMITED BHIWADI RAJASTHAN - 301019

PARTY SAMPLE & ORG.	SAMPLE		PARTY NAME	M/S WORKSPACE SOLUTIONS		REF:- AS PER EMAIL Dt.- 04.12.17			
				DRAWN	VIVEK YADAV	13.12.17	AREA	502.00	MM²
				CHECKED			WEIGHT	1.355	KG/M.
001	(B)	Dim. 11.5 was 12.5 & 14.5 was 15.5		APPROVED			WT. RANGE	-------	Kg/12
	(A)	Dim. 10 was 11 & 12.5 was 13.5		SCALE	2:1	DATE	ALLOY	6063-T6	
	(REF.)	As per email dt.- 19.12.17		CRITICAL DIM.	*		MAL NO	16768	
REV. STATUS	REV. NO.	DESCRIPTION	SIGN DATE	PERIMETER	INT.	264.43	SEC.NO.	D-7070	
A3		REVISE			EXT.	287.90			