BEFORE APPROVAL CHECK ALL DIM. PROPELY

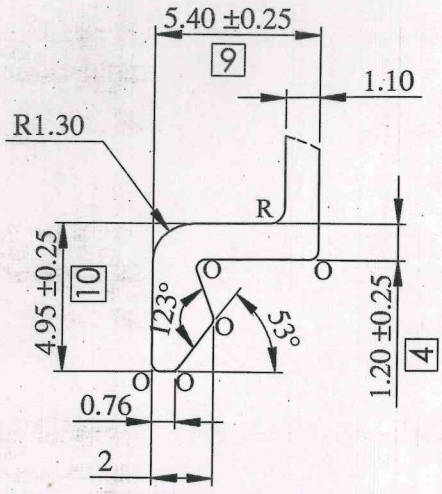

DETAIL A
SCALE 4 : 1

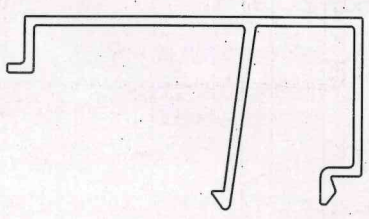

ACTUAL SIZE

NOTE:-

R = 0.5R

O = 0.3R

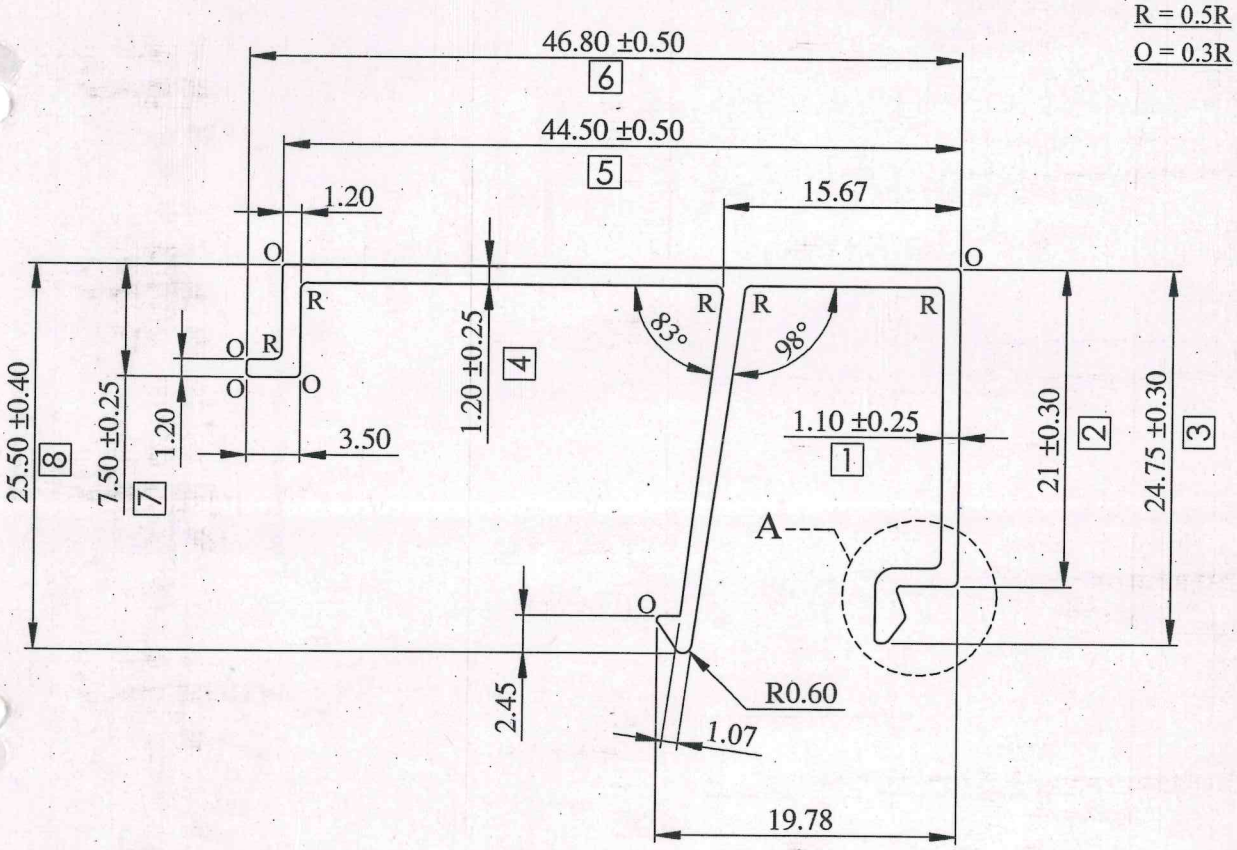

LOCATION:- P3 - 2HOLE
ALL DIMENSION ARE IN mm.
UNSPECIFIED CORNER RADIUS:0.40

PLEASE SPECIFY THE EXPOSED SURFACE

TOL. AS PER BS EN 755-9:2008
UNLESS SPECIFIED

TWIST = ±1/4°/300 M.M./MTR.
FLATNESS = WIDTH X 0.005 M.M.
STRAIGHTNESS = 1.50 M.M./MTR.
ANGULARITY = ±1.5°

INDO ALUSYS INDUSTRIES LIMITED BHIWADI RAJASTHAN - 301019

PARTY SAMPLE & DRG.	DRG		PARTY NAME M/s ARCHITECTURAL FACADE SYSTEM				REF:– AS PER EMAIL Dt.-28.03.19		
				DRAWN	SONU	29.03.19	AREA	128.44	MM²
				CHECKED	Sunil	26.4.19	WEIGHT	0.346	KG/M.
				APPROVED			WT. RANGE	-------	Kg/12'
				SCALE	1:1,2:1 &4:1	DATE	ALLOY	6063-T6	
00	(REF.)			CRITICAL DIM.	*		MAL NO	17672	
REV. STATUS	REV. NO.	DESCRIPTION	SIGN DATE	PERIMETER	INT.	.....	SEC.NO.	D-7390	
A4	REVISION				EXT.	211.21			