MAL NO. 17722
D7413

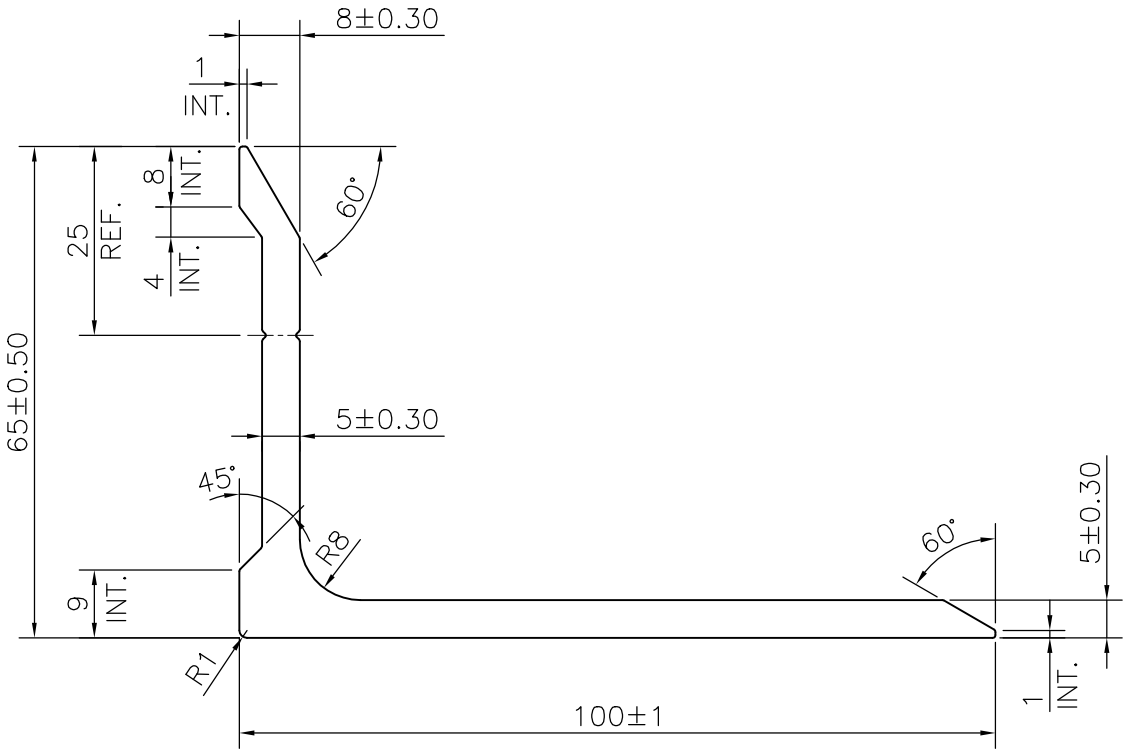

NOTE:-
V= 0.5x90° V GROOVE (2 PLACES)

JINDAL SYMBOL OF QUALITY AN ISO 9001 COMPANY	*JINDAL ALUMINIUM LTD.* *BHIWADI–301019 (INDIA)*		NAME	DATE
		DRAWN	AMIT	19–09–2023
		CHECKED		
		APPROVED		
1. ALL DIMENSIONS ARE IN mm. 2. ROUND OFF ALL SHARP CORNERS WITH 0.40 mm. 3. TOLERANCES WILL BE AS PER IS:3965–1981 , UNLESS OTHERWISE SPECIFIED		SCALE		1:1
		AREA mm^2		802.885
		PERIMETER mm.		320.543
		WEIGHT kg/m		2.168
PARTY'S NAME	GAURSONS GROUP	DRAWING No.		SECTION No.
PARTY'S DRAWING No.	AS PER DRAWING	MAL NO. 17722		–
ALLOY & TEMPER	6061 T6 — PRODUCT CODE:–029 — HSN CODE:– 76042990	D7413		D7413
DESCRIPTION	STRUCTURAL MISC. SECTION			