MAL NO.–17877
D7461

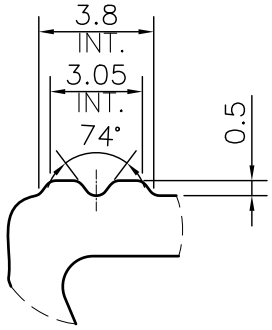

DETAIL A
SCALE 4:1

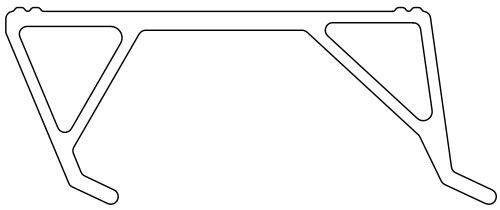

SCALE 1:1

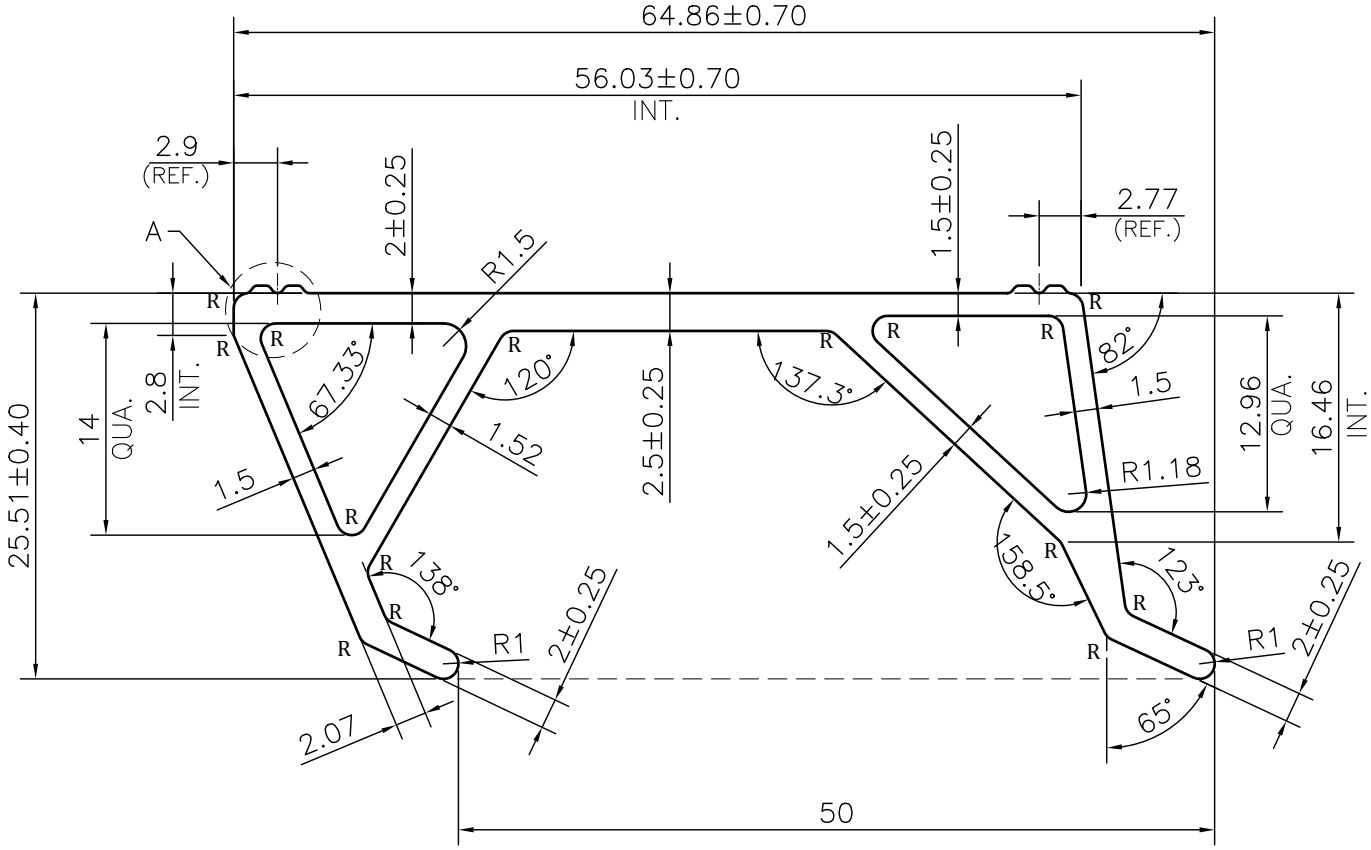

NOTE:-
R= 1.0 RADIUS (15 PLACES)

1. STRAIGHTNESS= 1.7mm/M
2. TWIST= 1.7mm/M
3. ANGULARITY= ±2°
4. FLATNESS= 0.007xWIDTH

JINDAL
SYMBOL OF QUALITY
AN ISO 9001 COMPANY

JINDAL ALUMINIUM LTD.

BHIWADI–301019 (INDIA)

	NAME	DATE
DRAWN	ASHUTOSH	28–03–2024
CHECKED		
APPROVED		

1. ALL DIMENSIONS ARE IN mm.
2. ROUND OFF ALL SHARP CORNERS WITH 0.40 mm.
3. TOLERANCES WILL BE AS PER BS:EN–755–9 , UNLESS OTHERWISE SPECIFIED

SCALE	2:1
AREA mm^2	282.938
PERIMETER mm.	202.129
WEIGHT kg/m	0.764

DRAWING No.	SECTION No.
MAL NO.–17877	–
D7461	D7461

PARTY'S NAME	NEW ERA INDUSTRIES	
PARTY'S DRAWING No.	AS PER DRAWING	
ALLOY & TEMPER	6063 T6	PRODUCT CODE:–056 HSN CODE:– 76042100
DESCRIPTION	ARCHITECTURAL MISC. SECTION	