IAL-17980

D7493

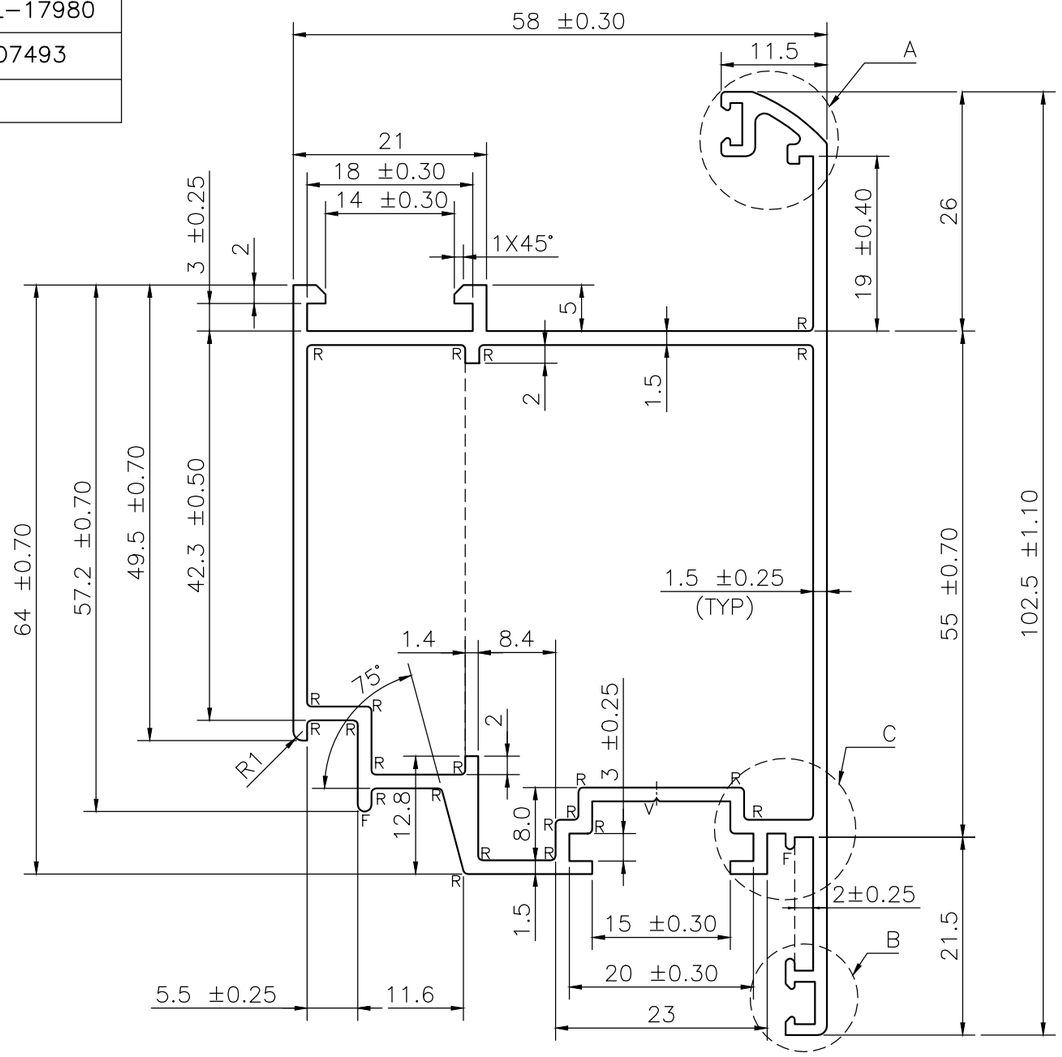

NOTE:-

r=0.30R
R=0.50R
K=0.6R
S=1.00R
V=0.3x0.6x90°
F=Full Radius

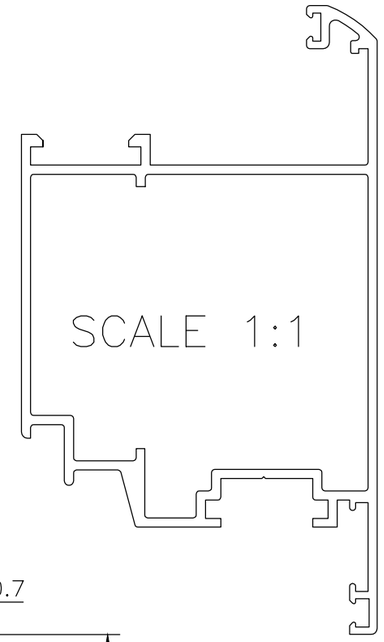

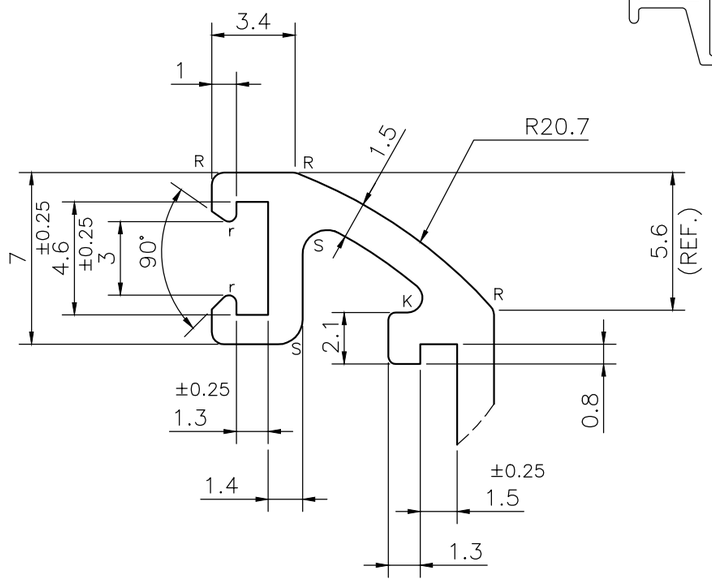

DETAIL A
SCALE 4:1

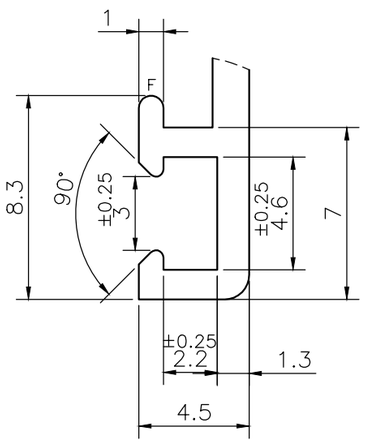

DETAIL B
SCALE 4:1

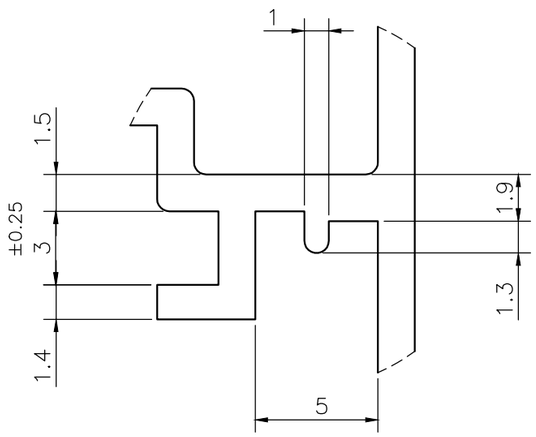

DETAIL C
SCALE 4:1

TWIST= ±1/4°/300M.M./M.
FLATNESS=WIDTHX0.005mm.
STRAIGHTNESS= 1.5 M.M./MTR.
ANGULARITY= ±1.5°

JINDAL
SYMBOL OF QUALITY
AN ISO 9001 COMPANY

JINDAL ALUMINIUM LTD.
BANGALORE-560073 (INDIA)

1. ALL DIMENSIONS ARE IN mm.
2. ROUND OFF ALL SHARP CORNERS WITH 0.40 mm.
3. TOLERANCES WILL BE AS PER BS:EN-755-9 , UNLESS OTHERWISE SPECIFIED

	NAME	DATE
DRAWN	ASHUTOSH	12-05-2022
CHECKED		
APPROVED		

SCALE	1:1,1.5:1,4:1
AREA mm^2	520.0
PERIMETER mm.	438.6
WEIGHT kg/m	1.404

DRAWING No.	SECTION No.
IAL-17980	–
D7493	D7493

PARTY'S NAME	M/S. DAS
PARTY'S DRAWING No.	AS PER DRAWING
ALLOY & TEMPER	6063 T6
DESCRIPTION	WINDOW SECTION