JAL–B–024
–
D–7518

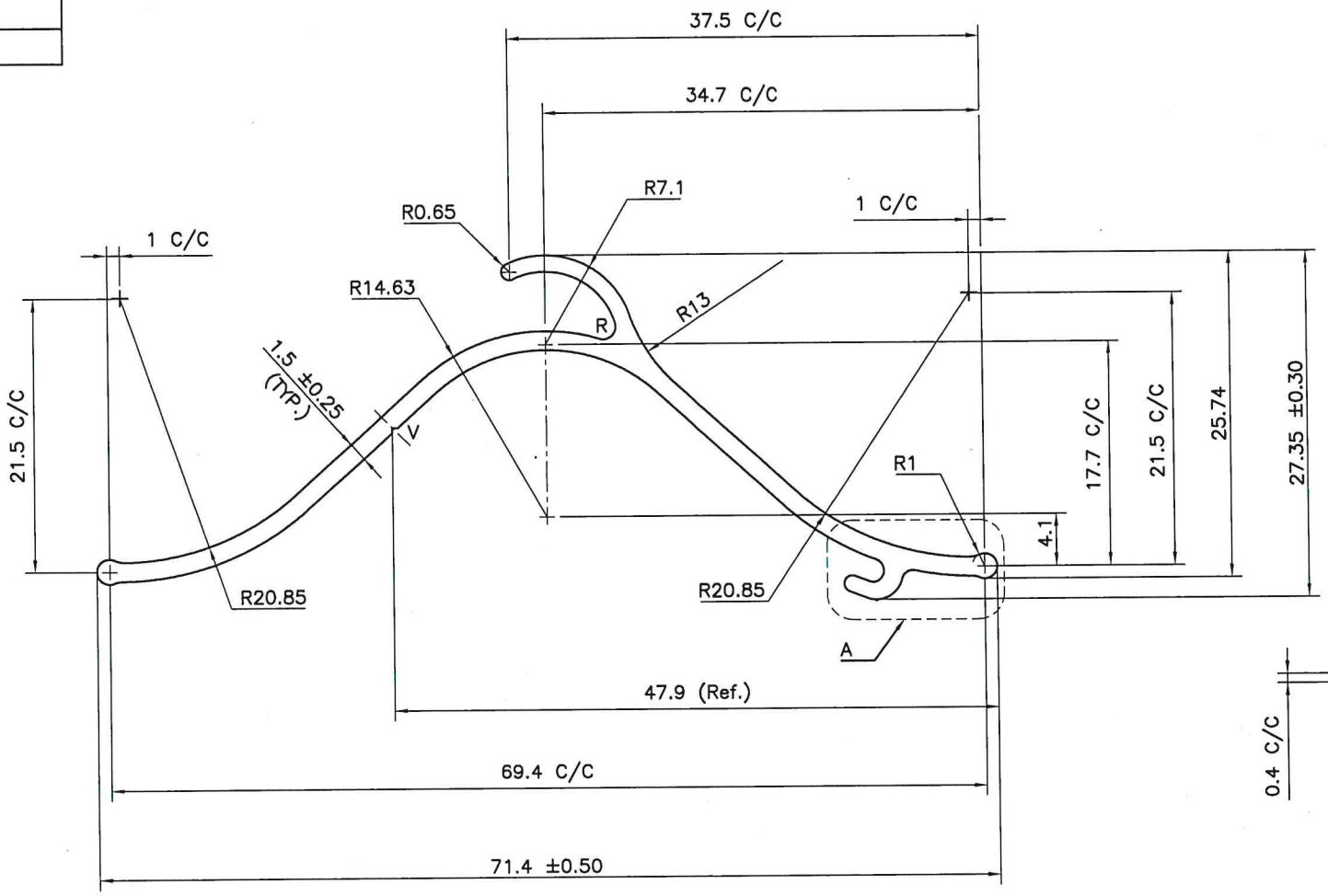

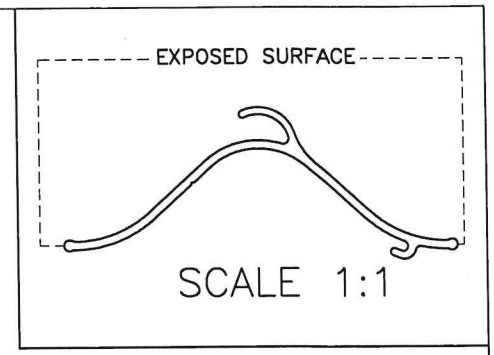

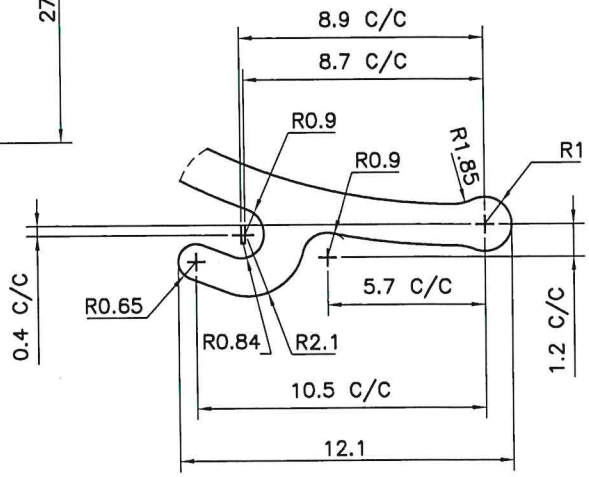

DETAIL A
SCALE 5:1

NOTE:–

V– (0.3x90°) V–GROOVE

R– 1.00R

			NAME	DATE
SYMBOL OF QUALITY AN ISO 9001 COMPANY	JINDAL ALUMINIUM LTD. BANGALORE–560073 (INDIA)	DRAWN	ASHUTOSH	19.07.2022
		CHECKED		22.7.22
		APPROVED		22.07.22
1. ALL DIMENSIONS ARE IN mm. 2. ROUND OFF ALL SHARP CORNERS WITH 0.40 mm. 3. TOLERANCES WILL BE AS PER BS:EN–755–9 , UNLESS OTHERWISE SPECIFIED		SCALE		1:1 & 2.5:1
		AREA mm^2		153.00
		PERIMETER mm.		202.96
		WEIGHT kg/m		0.413
PARTY'S NAME	M/S. RUSKIN AIR & SOUND CONTROL	DRAWING No.		SECTION No.
PARTY'S DRAWING No.	AS PER DRAWING– (70–021819–00B)	JAL–B–024		D–7518
ALLOY & TEMPER	6063–T6	–		
DESCRIPTION	–			