P–24267
–
D–7522

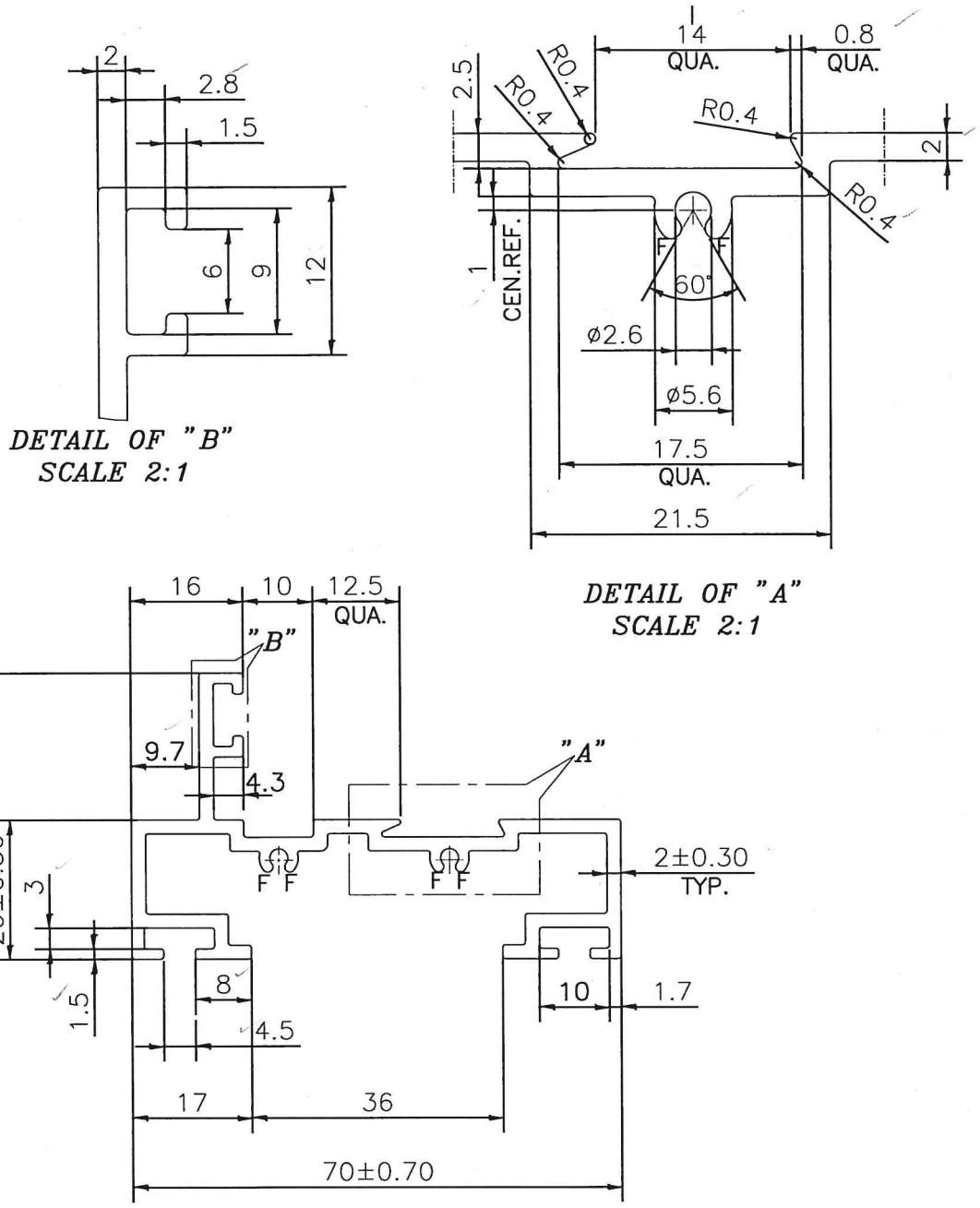

F=FULL RADIUS (4 PLACES)

1. STRAIGHTNESS= 1.7mm/M
2. TWIST= 1.7mm/M
3. ANGULARITY= ±2°
4. FLATNESS= 0.007xWIDTH

1) THE WELDING LINE IN THE EXPOSED SURFACE OF PROFILE IS UNAVOIDABLE. 2) PLEASE SPECIFY IMPORTANT SIZES. 3) PLEASE SPECIFY IF THIS PROFILE MATCHES WITH OTHER PROFILES. 4) PLEASE SPECIFY EXPOSED SURFACE. OTHER WISE CONSIDERED AS NO EXPOSED SURFACE. 5) FINISH :– ☐ MILL FINISH / ☐ ANODIZING / ☐ POWDER COATING

JINDAL
SYMBOL OF QUALITY
AN ISO 9001 COMPANY

JINDAL ALUMINIUM LTD.
BANGALORE–560073 (INDIA)

	NAME	DATE
DRAWN	SURENDRA	14–07–2022
CHECKED		22-7-22
APPROVED		22.07.22

1. ALL DIMENSIONS ARE IN mm.
2. ROUND OFF ALL SHARP CORNERS WITH 0.40 mm.
3. TOLERANCES WILL BE AS PER IS:3965–1981 , UNLESS OTHERWISE SPECIFIED

SCALE	1:1
AREA mm^2	404.9923
PERIMETER mm.	416.6608
WEIGHT kg/m	1.093

PARTY'S NAME	ATC., DELHI	DRAWING No.	SECTION No.
PARTY'S DRAWING No.	HEAVIER THAN 21105	P–24267	D–7522
ALLOY & TEMPER	6063 T6	PRODUCT CODE:–048	–
		HSN CODE:–76042990	
DESCRIPTION	WINDOW SECTION		