P-10860-2

E0024

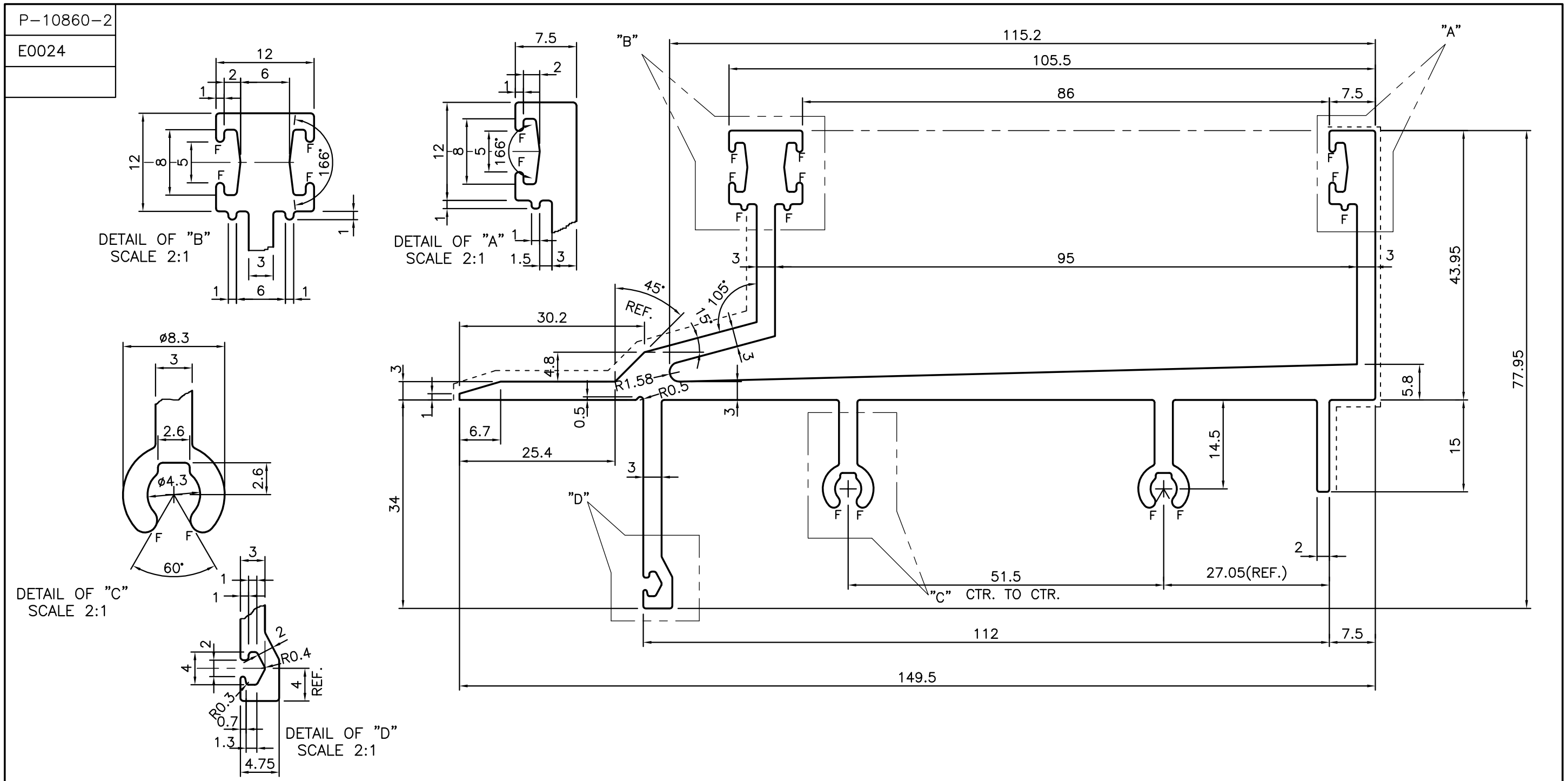

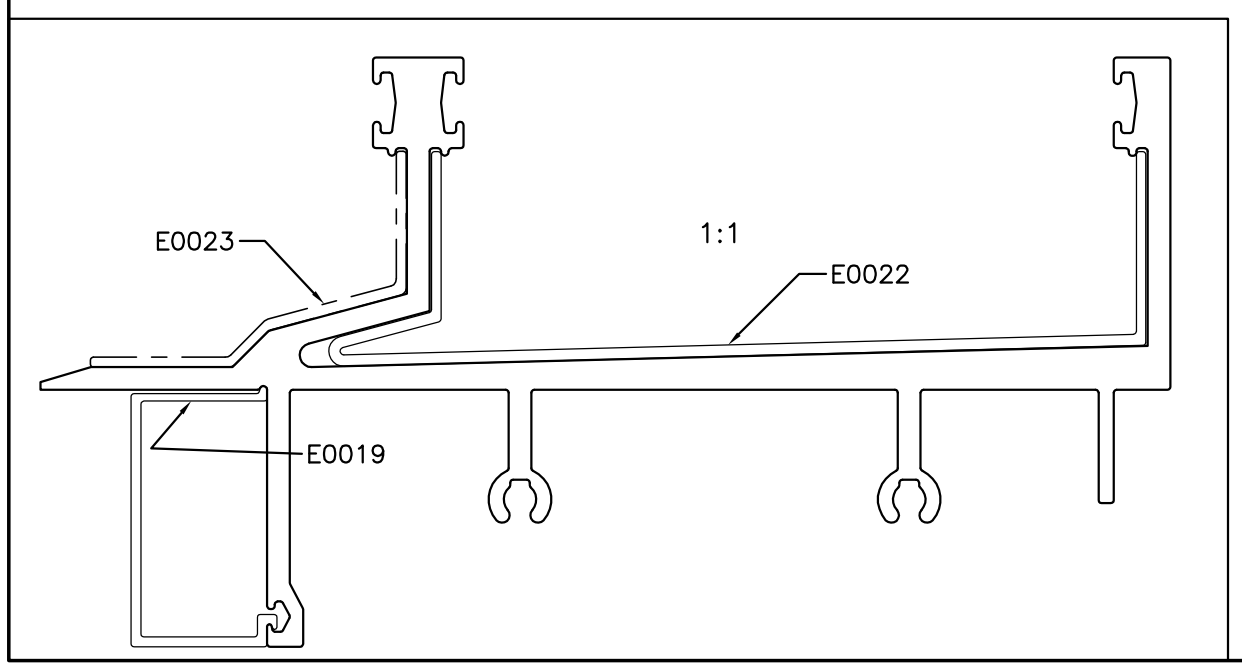

--------- EXPOSED SURFACE

F = FULL RADIUS (19 PLACES)

JINDAL SYMBOL OF QUALITY AN ISO 9001 COMPANY	*JINDAL ALUMINIUM LTD.* *BANGALORE-560073 (INDIA)*		NAME / DATE
		DRAWN	RAGHAVENDRA 11-06-2011
		CHECKED	
		APPROVED	S.S.GARG 08-07-2011
1. ALL DIMENSIONS ARE IN mm. 2. ROUND OFF ALL SHARP CORNERS WITH 0.40 mm. 3. TOLERANCES WILL BE AS PER IS:3965-1981 UNLESS OTHERWISE SPECIFIED		SCALE	1:1
		AREA mm^2	1265.868
		PERIMETER mm.	753.454
		WEIGHT kg/m	3.418
PARTY'S NAME	ALUPRO BUILDING SYSTEMS.PVT.LTD.,BANGALORE	DRAWING No.	SECTION No.
PARTY'S DRAWING No.	AS PER DRAWING	P-10860-2	–
ALLOY & TEMPER	HE9 WP	E0024	E0024
DESCRIPTION	CURTAIN WALL (GUTER SECTION)		