P-11146-2
E0036

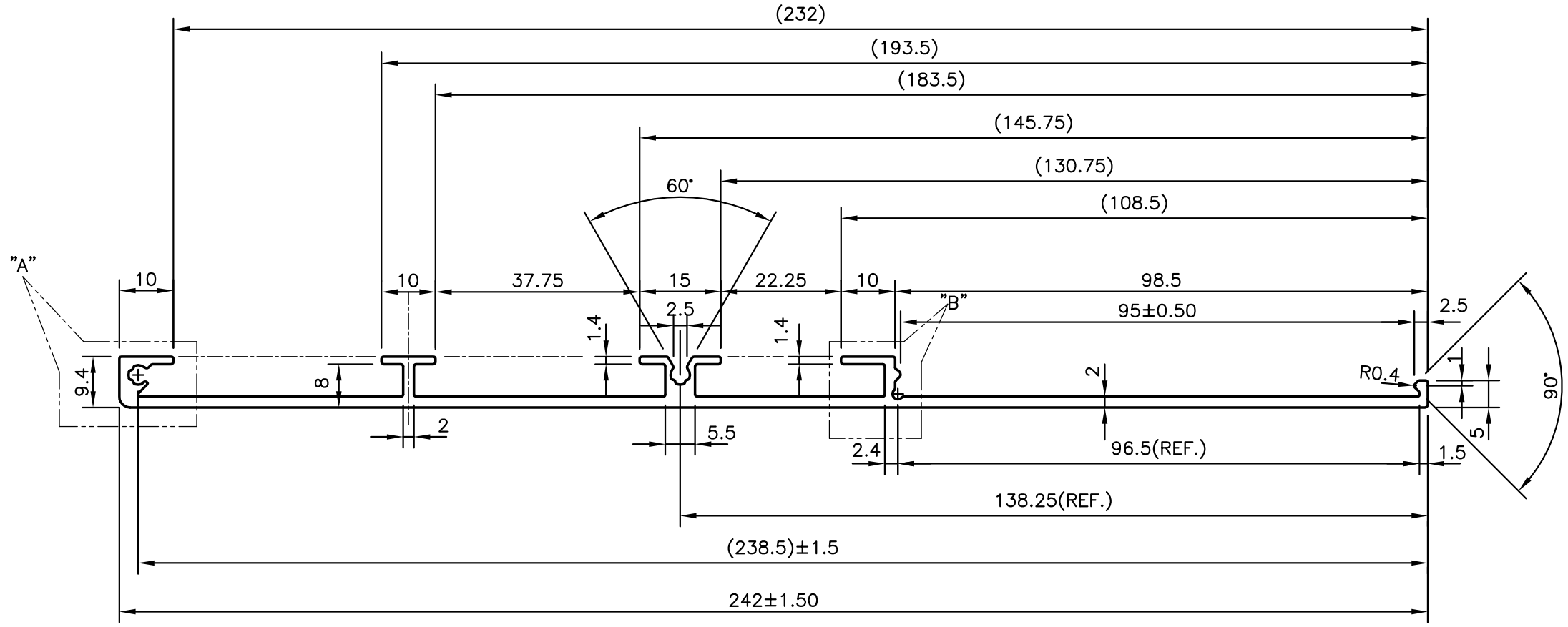

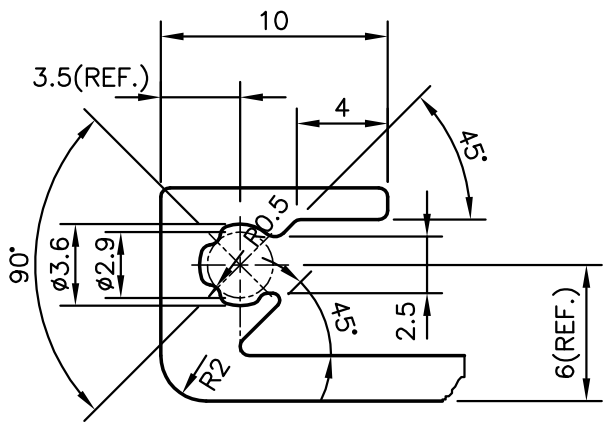

DETAIL OF "A"
SCALE 3:1

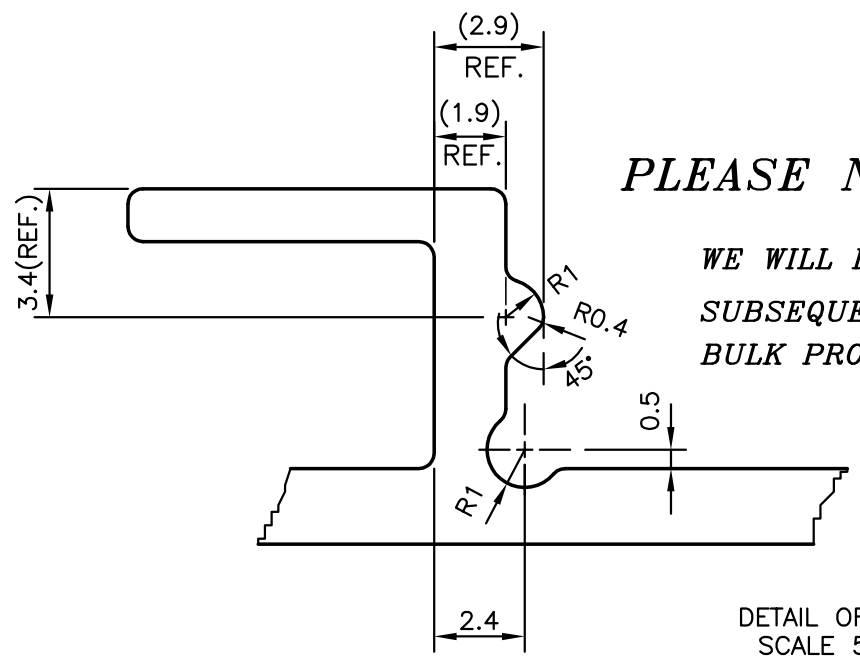

DETAIL OF "B"
SCALE 5:1

PLEASE NOTE :-

WE WILL ENSURE THE FITMENT AS PER SAMPLE GIVEN BY PARTY AT OUR END SUBSEQUENTLY WE WILL NOT GIVE ANY GUARANTEE OF FITMENT AS PER THEIR BULK PRODUCTION SINCE WIDTH VARIATION MAY BE THERE IN THEIR PRODUCT.

JINDAL SYMBOL OF QUALITY AN ISO 9001 COMPANY	*JINDAL ALUMINIUM LTD.* *BANGALORE-560073 (INDIA)*		NAME	DATE
		DRAWN	J.P.KAUSHIK	08-08-2011
		CHECKED		
		APPROVED	S.S.GARG	30-08-2011
1. ALL DIMENSIONS ARE IN mm. 2. ROUND OFF ALL SHARP CORNERS WITH 0.40 mm. 3. TOLERANCES WILL BE AS PER,BS:EN-755-9 UNLESS OTHERWISE SPECIFIED		SCALE		1:1
		AREA mm^2		611.787
		PERIMETER mm.		628.376
		WEIGHT kg/m		1.652
PARTY'S NAME	DORMA INDIA PVT. LTD., CHENNAI	DRAWING No.		SECTION No.
PARTY'S DRAWING No.	8.04.000.011.0	P-11146-2		-
ALLOY & TEMPER	6060 T6	E0036		E0036
DESCRIPTION	DECKPROFILE 242 mm			