P-11799-1

E0054

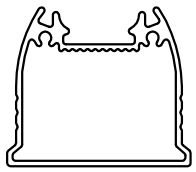

SCALE :- 1:1

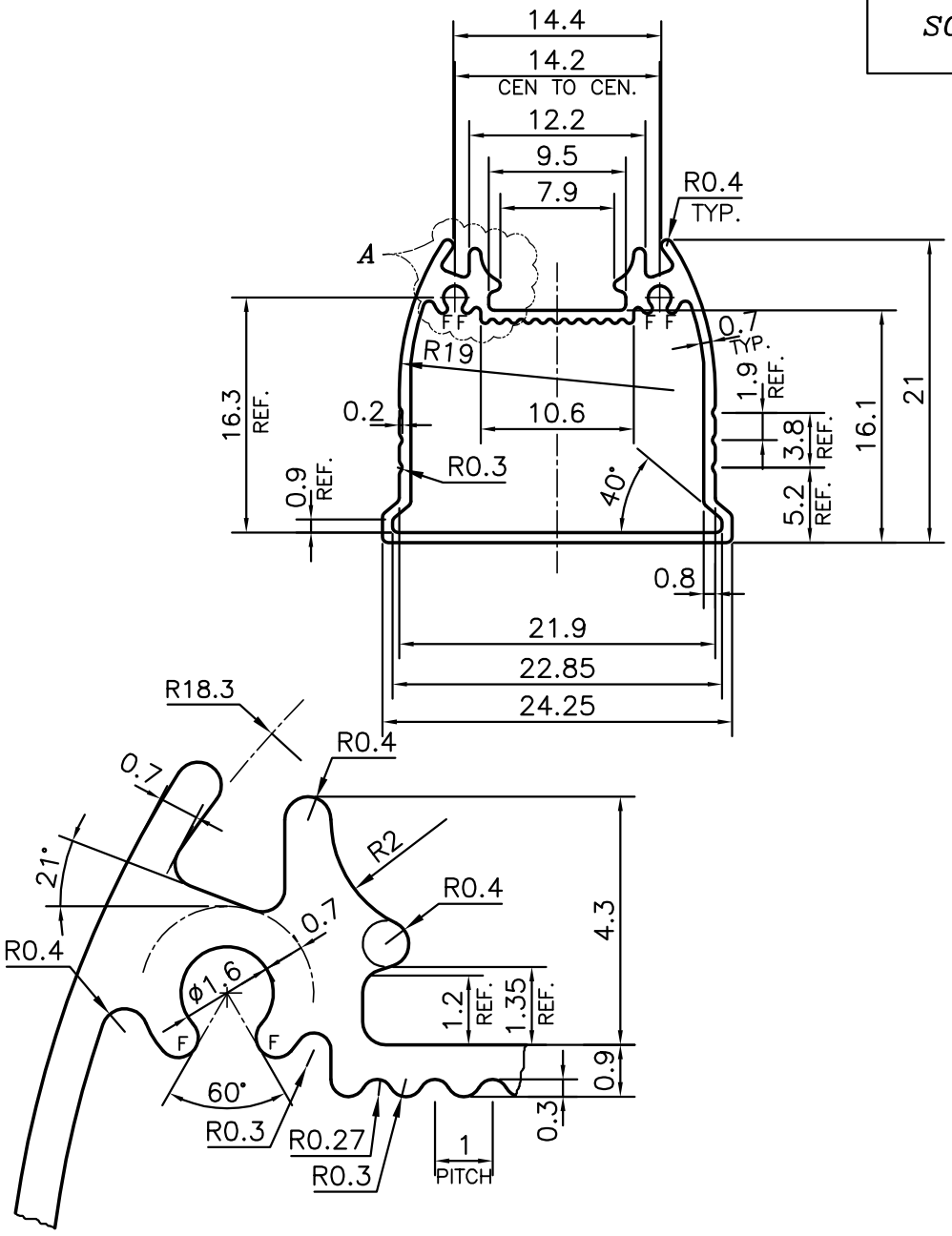

DETAIL OF "A"
SCALE 8:1

F = FULL RADIUS (4 PLACES)

			NAME	DATE
JINDAL SYMBOL OF QUALITY AN ISO 9001 COMPANY	*JINDAL ALUMINIUM LTD.* *BANGALORE-560073 (INDIA)*	DRAWN	*PARVESH*	12-06-2012
		CHECKED		
		APPROVED	S.S.GARG	16-06-2012

1. ALL DIMENSIONS ARE IN mm.
2. ROUND OFF ALL SHARP CORNERS WITH 0.40 mm.
3. TOLERANCES WILL BE AS PER IS:6477-1983 , UNLESS OTHERWISE SPECIFIED

SCALE	2:1
AREA mm^2	77.313
PERIMETER mm.	102.255
WEIGHT kg/m	0.209

PARTY'S NAME	STELLAR GREENTECH PVT. LTD., GURGAON
PARTY'S DRAWING No.	AS PER SAMPLE
ALLOY & TEMPER	6063 T6
DESCRIPTION	TUBE LIGHT SECTION

DRAWING No.	SECTION No.
P-11799-1	-
E0054	E0054