P–11828	
E0060	

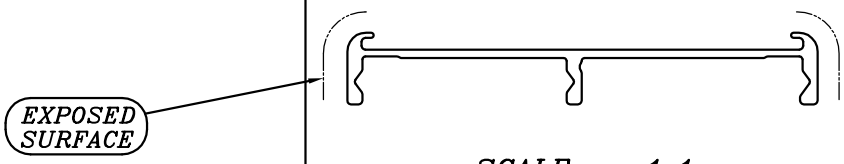

SCALE :– 1:1

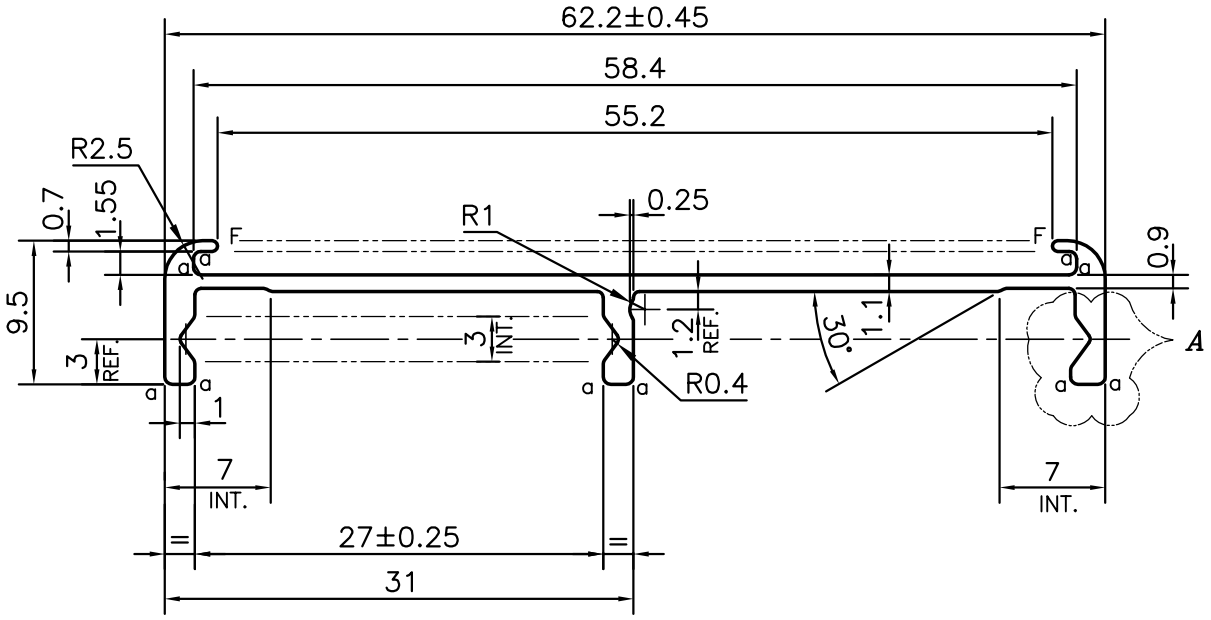

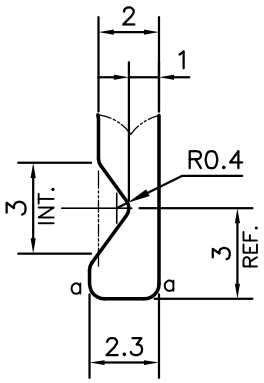

DETAIL OF "A"
SCALE 4:1

a = RADIUS 0.5 mm. (10 PLACES)
F = FULL RADIUS (2 PLACES)

JINDAL
SYMBOL OF QUALITY
AN ISO 9001 COMPANY

JINDAL ALUMINIUM LTD.

BANGALORE–560073 (INDIA)

	NAME	DATE
DRAWN	PARVESH	16–06–2012
CHECKED		
APPROVED	S.S.GARG	07–08–2012

1. ALL DIMENSIONS ARE IN mm.
2. ROUND OFF ALL SHARP CORNERS WITH 0.40 mm.
3. TOLERANCES WILL BE AS PER BS:EN–755–9, UNLESS OTHERWISE SPECIFIED

SCALE	2:1
AREA mm^2	106.688
PERIMETER mm.	176.161
WEIGHT kg/m	0.288

PARTY'S NAME	COSIGN INDIA PVT. LTD., PUNE
PARTY'S DRAWING No.	1–P–20775A
ALLOY & TEMPER	6060 T66
DESCRIPTION	DISPLAY SECTION

DRAWING No.	SECTION No.
P–11828	–
E0060	E0060