P-12487-2
E0098

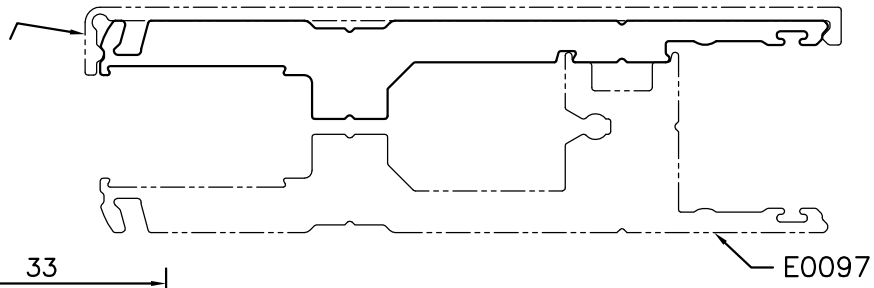

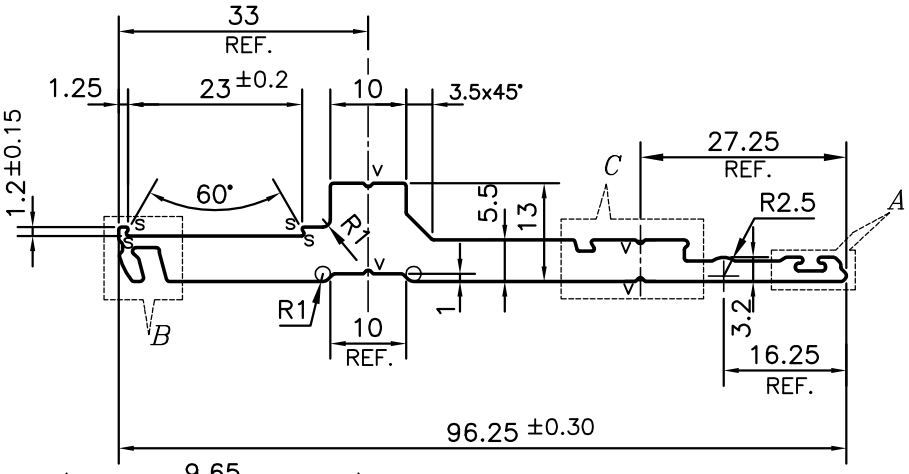

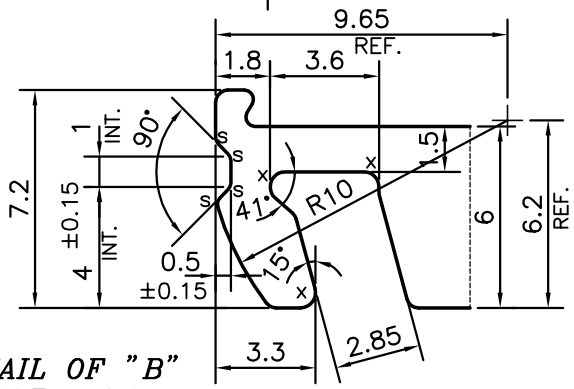

DETAIL OF "B"
SCALE:– 4:1

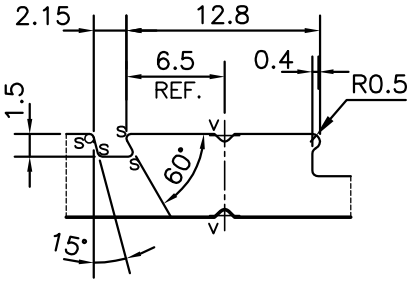

DETAIL OF "C"
SCALE:– 2:1

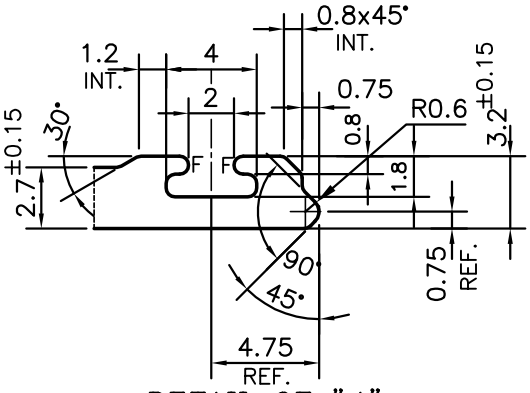

DETAIL OF "A"
SCALE:– 3:1

V = VEE GROOVE 0.5x90° (4 PLACES)
S = RADIUS 0.3 mm. (18 PLACES)
X = RADIUS 0.5 mm. (5 PLACES)
F = FULL RADIUS (2 PLACES)

SYMBOL OF QUALITY
AN ISO 9001 COMPANY

JINDAL ALUMINIUM LTD.

BANGALORE–560073 (INDIA)

	NAME	DATE
DRAWN	*PARVESH*	02–03–2013
CHECKED		
APPROVED		

1. ALL DIMENSIONS ARE IN mm.
2. ROUND OFF ALL SHARP CORNERS WITH 0.40 mm.
3. TOLERANCES WILL BE AS PER BS:EN–12020–2 , UNLESS OTHERWISE SPECIFIED

SCALE	1:1
AREA mm^2	535.855
PERIMETER mm.	237.343
WEIGHT kg/m	1.447

PARTY'S NAME	DORMA INDIA PVT. LTD., CHENNAI
PARTY'S DRAWING No.	AS PER Auto CAD DRAWING
ALLOY & TEMPER	6060 T66
DESCRIPTION	MISC. SECTION

DRAWING No.	SECTION No.
P–12487–2	–
E0098	E0098